AXSD-33C4 2.67Gbps Single-mode 1310nm, SFP Transceiver with Monitoring Interface

Product Overview

The AXSD-33C4 is specifically designed for the high performance integrated duplex data link over single-mode optical fiber. This transceiver module is compliant with the Small Form-factor Pluggable (SFP) Multisource Agreement (MSA). An enhanced Digital Diagnostic Monitoring Interface has been incorporated into the Axcen SFP Transceiver. Real time monitors of temperature, supply voltage, laser bias current, laser average output power and received output power are provided, based on the SFF-8472.

The AXSD-33C4 SFP transceivers using a long wavelength (1310nm) DFB laser diodes enable data transmission up to 15km on a single-mode (9/125μm) optical fiber.

Features

- **SFP Multi-Source Agreement compliant**
- **LC duplex receptacle**
- **2.67Gbps multi-rate support**
- **2.488Gbps ITU-T G.957 STM S-16.1 compliant.**
- **2.488Gbps SONET OC-48 IR-1 compliant**
- **SFF-8472 diagnostic monitoring interface for optical transceivers**
- **Alarms and warnings to indicate status of real time monitors**
- **15km reach**
- **Low power dissipation**

Applications

- **High speed I/O for file server**
- **Mass storage system I/O**
- **Host adapter I/O**
- **Bus extension application**

Block diagram

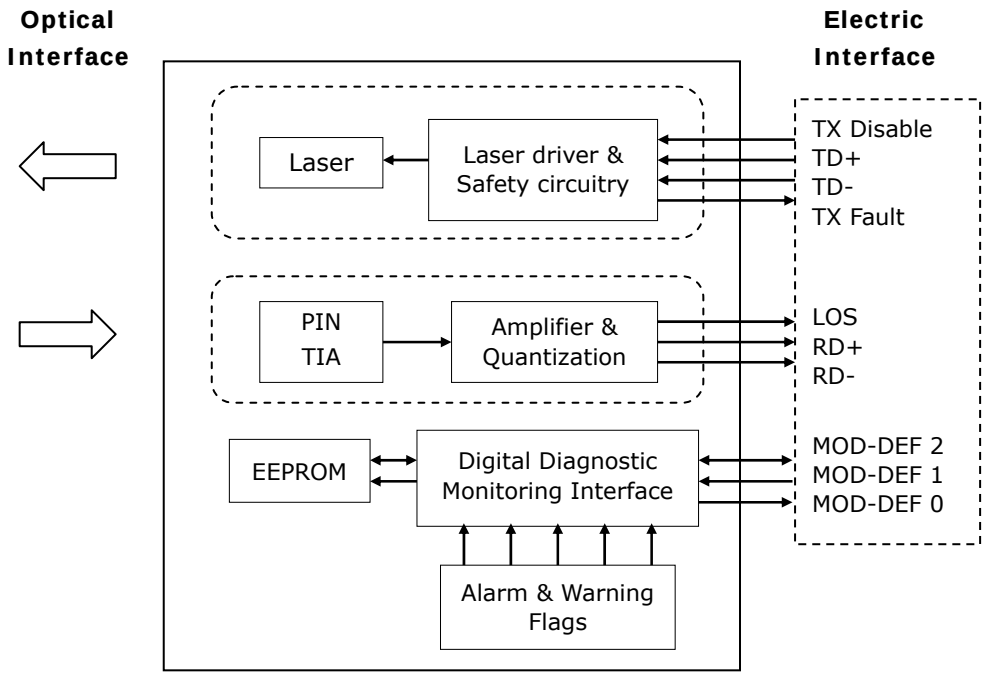

The transceiver is fundamentally consisted by two parts: transmitter and receiver. The transmitter features a TTL logic level Disable signal and a Fault indicator. The receiver features a TTL logic Loss of Signal (LOS) detection. The serial ID interface defines a 256-byte memory map in EEPROM, accessible over a 2 wire, serial interface at the 8 bit address 1010000X (A0h). The Digital Diagnostic Monitoring Interface makes use of the 8 bit address 1010001X (A2h), so the originally defined serial ID memory map remains unchanged and is therefore backward compatible. The detailed signal descriptions are listed in the following sections.

Absolute Maximum Ratings

Parameter	Symbol	Min.	Max.	Unit	Note
Storage Temperature	T_S	-40	+85	℃	
Supply Voltage	$V_{CC}T$ $V_{CC}R$	-0.5	4.0	V	
Storage Relative Humidity	RH	5	95	%	

Recommended Operating Conditions

Parameter	Symbol	Min.	Typ.	Max.	Unit	Note
Case Operating Temperature	T_C	0		70	℃	Refer to ordering information
		-40		85		
Supply Voltage	V_{CC}	3.1	3.3	3.5	V	
Supply Current	$I_{TX}+I_{RX}$		180	300	mA	

Transmitter Electro-Optical Interface

Parameter	Symbol	Min.	Typ.	Max.	Unit	Note
Transmitter Differential Input Voltage	TD +/-	400		2400	mV	
Tx_Fault – High	V_{Fault_H}	2		V_{cc}	V	
Tx_Fault – Low	V_{Fault_L}	V_{ee}		V_{ee}+0.8	V	
Tx_Disable – High	$V_{Disable_H}$	2		V_{cc}	V	
Tx_Disable – Low	$V_{Disable_L}$	V_{ee}		V_{ee}+0.8	V	
Optical Output Power	P_o	-5		0	dBm	1
Optical Extinction Ratio	E_R	8.2			dB	
Center Wavelength	λ_C	1260	1310	1360	nm	
Spectral Width (-20dB)	$\Delta\lambda$			1	nm	
Side Mode Suppression Ratio	SMSR	30			dB	
Optical Rise / Fall Time	t_r / t_f			0.16	ns	2

Notes:

1. Coupling into a 9/125μm single-mode fiber.
2. 20% to 80% value

Receiver Electro-Optical Interface

Parameter	Symbol	Min.	Typ.	Max.	Unit	Note
Receiver Differential Output Voltage	RD +/-	400		2000	mV	
Receiver Overload	$P_{IN}MAX$	0			dBm	1
Receiver Sensitivity @2.67Gbps	$P_{IN}MIN$			-18	dBm	1
Receiver Sensitivity @2.488Gbps	$P_{IN}MIN$			-18	dBm	1
Receiver Sensitivity @2.125Gbps	$P_{IN}MIN$			-18	dBm	2
Receiver Sensitivity @1.25Gbps	$P_{IN}MIN$			-18	dBm	2
Receiver Sensitivity @1.063bps	$P_{IN}MIN$			-18	dBm	2
Receiver Sensitivity @622Mbps	$P_{IN}MIN$			-18	dBm	1
Receiver Sensitivity @622Mbps	$P_{IN}MIN$			-18	dBm	1
Operating Center Wavelength	λ_c	1260		1580	nm	
Receiver Loss of Signal - TTL Low	P_{RX_LOSD}			-18	dBm	
Receiver Loss of Signal - TTL High	P_{RX_LOSA}	-45			dBm	
Receiver Loss of Signal - Hysteresis	P_{RX_LOSH}	0.5			dB	

Notes:

1. With BER better than or equal to 1×10^{-10}, measured in the center of the eye opening with 2^{23} -1 PRBS
2. With BER better than or equal to 1×10^{-12}, measured in the center of the eye opening with 2^{7} -1 PRBS

Digital Diagnostic Memory Map

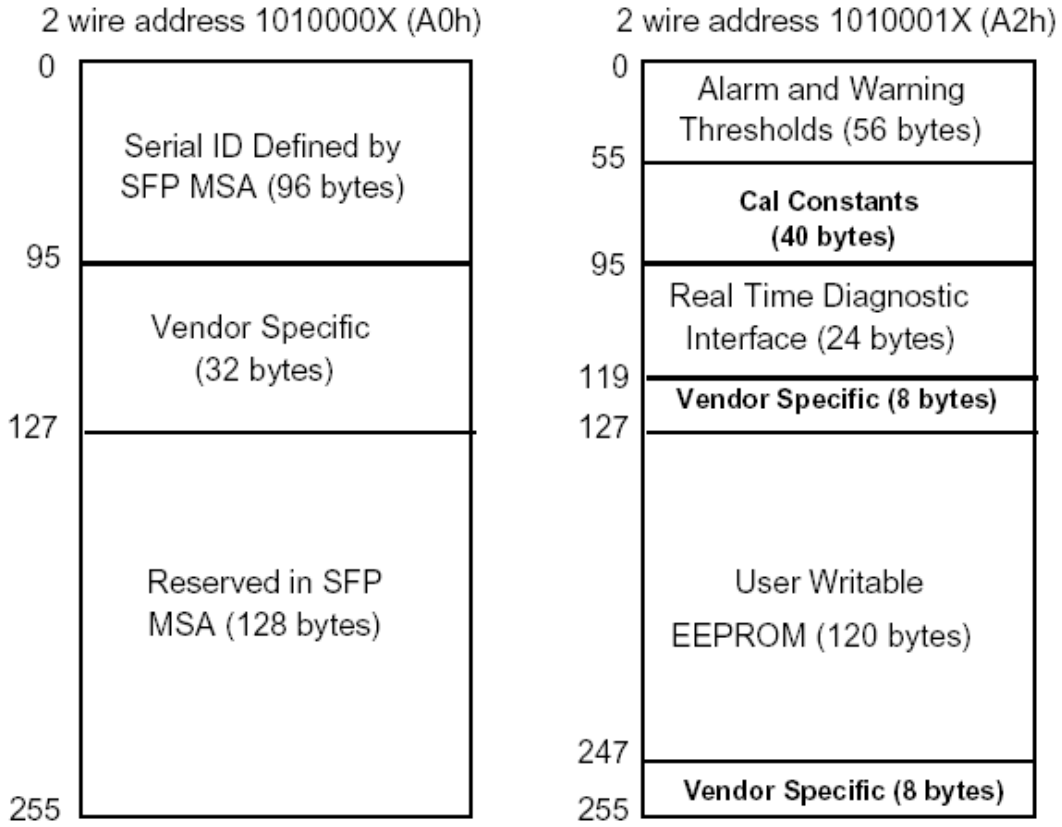

Digital Diagnostic Monitoring Characteristics

Parameter	Symbol	Accuracy	Unit	Note
Transceiver Temperature	T_{INT}	±3	℃	
Transceiver Supply Voltage	V_{INT}	±3	%	
TX Bias Current	I_{BIAS}	±10	%	
TX Output Power	P_{TX}	±3	dB	
RX Received Optical Power	P_{RX}	±3	dB	

Pin Description

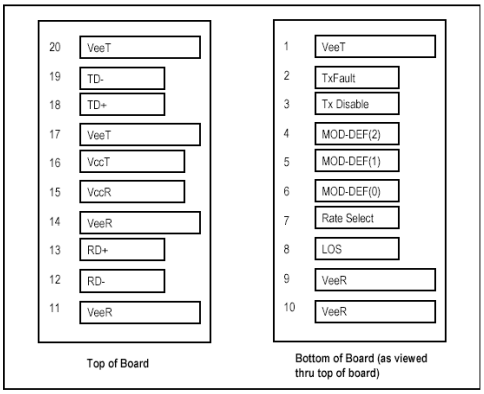

SFP Transceiver Electric Pad Layout

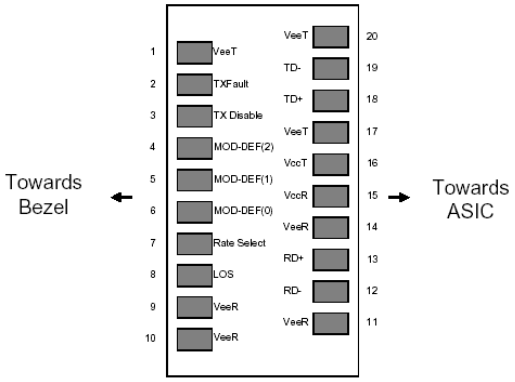

Diagram of Host Board Connector Block Pin Numbers and Names

Pin No	Pin Name	Function	Plug Seq.	Notes
1	VeeT	Transmitter Ground	1	
2	TX Fault	Transmitter Fault Indication	3	1
3	TX Disable	Transmitter Disable	3	2
4	MOD-DEF 2	Module Definition 2	3	3
5	MOD-DEF 1	Module Definition 1	3	3
6	MOD-DEF 0	Module Definition 0	3	3
7	Rate Select	Select between full or reduced receiver bandwidth	3	4
8	LOS	Loss of Signal	3	5
9	VeeR	Receiver Ground	1	6
10	VeeR	Receiver Ground	1	6
11	VeeR	Receiver Ground	1	6
12	RD -	Inv. Received Data Out	3	7
13	RD +	Received Data Out	3	7
14	VeeR	Receiver Ground	1	6
15	VccR	Receiver Power	2	8
16	VccT	Transmitter Power	2	8
17	VeeT	Transmitter Ground	1	6
18	TD +	Transmit Data In	3	9
19	TD -	Inv. Transmit Data In	3	9
20	VeeT	Transmitter Ground	1	6

Notes:

Plug Seq.: Pin engagement sequence during hot plugging.

1. TX Fault is an open collector/drain output, which should be pulled up with a 4.7K – 10KΩ resistor on the host board. Pull up voltage between 2.0V and VccT, R+0.3V. When high, output indicates a laser fault of some kind. Low indicates normal operation. In the low state, the output will be pulled to < 0.8V.
2. TX disable is an input that is used to shut down the transmitter optical output. It is pulled up within the module with a 4.7 – 10 KΩ resistor. Its states are:
   Low (0 – 0.8V): Transmitter on
   (>0.8, < 2.0V): Undefined
   High (2.0 – 3.465V): Transmitter Disabled
   Open: Transmitter Disabled
3. Mod-Def 0,1,2. These are the module definition pins. They should be pulled up with a 4.7K - 10KΩ resistor on the host board. The pull-up voltage shall be VccT or VccR
   Mod-Def 0 is grounded by the module to indicate that the module is present
   Mod-Def 1 is the clock line of two wire serial interface for serial ID
   Mod-Def 2 is the data line of two wire serial interface for serial ID
4. This is an optional input used to control the receiver bandwidth for compatibility with multiple data rates (most likely Fiber Channel 1x and 2x Rates). If implemented, the input will be internally pulled down with > 30kΩ resistor. The input states are:
   Low (0 - 0.8V): Reduced Bandwidth
   (>0.8 , < 2.0V): Undefined
   High (2.0 V -3.465V): Full Bandwidth
   Open: Reduced Bandwidth
5. LOS (Loss of Signal) is an open collector/drain output, which should be pulled up with a 4.7K -10KΩ resistor. Pull up voltage between 2.0V and VccT, R+0.3V. When high, this output indicates the received optical power is below the worst-case receiver sensitivity (as defined by the standard in use). Low indicates normal operation. In the low state, the output will be pulled to < 0.8V.
6. VeeR and VeeT may be internally connected within the SFP module.
7. RD-/+: These are the differential receiver outputs. They are AC coupled 100Ω differential lines which should be terminated with 100Ω (differential) at the user SERDES. The AC coupling is done inside the module and is thus not required on the host board. The voltage swing on these lines will be between 370 and 2000 mV differential (185 - 1000 mV single ended) when properly terminated.
8. VccR and VccT are the receiver and transmitter power supplies. They are defined as 3.3V ±5% at the SFP connector pin. Maximum supply current is 300 mA. Recommended host board power supply filtering is shown below. Inductors with DC resistance of less than 1Ω should be used in order to maintain the required voltage at the SFP input pin with 3.3V supply voltage. When the recommended supply filtering network is used, hot plugging of the SFP transceiver module will result in an inrush current of no more than 30 mA greater than the steady state value. VccR and VccT may be internally connected within the SFP transceiver module.
9. TD-/+: These are the differential transmitter inputs. They are AC-coupled, differential lines with 100Ω differential termination inside the module. The AC coupling is done inside the module and is thus not required on the host board. The inputs will accept differential swings of 500 mV - 2400 mV (250 mV - 1200 mV single-ended), though it is recommended that values between 500 and 1200 mV differential (250 mV- 600 mV single-ended) be used for best EMI performance.

Mechanical Dimensions (Units in mm)

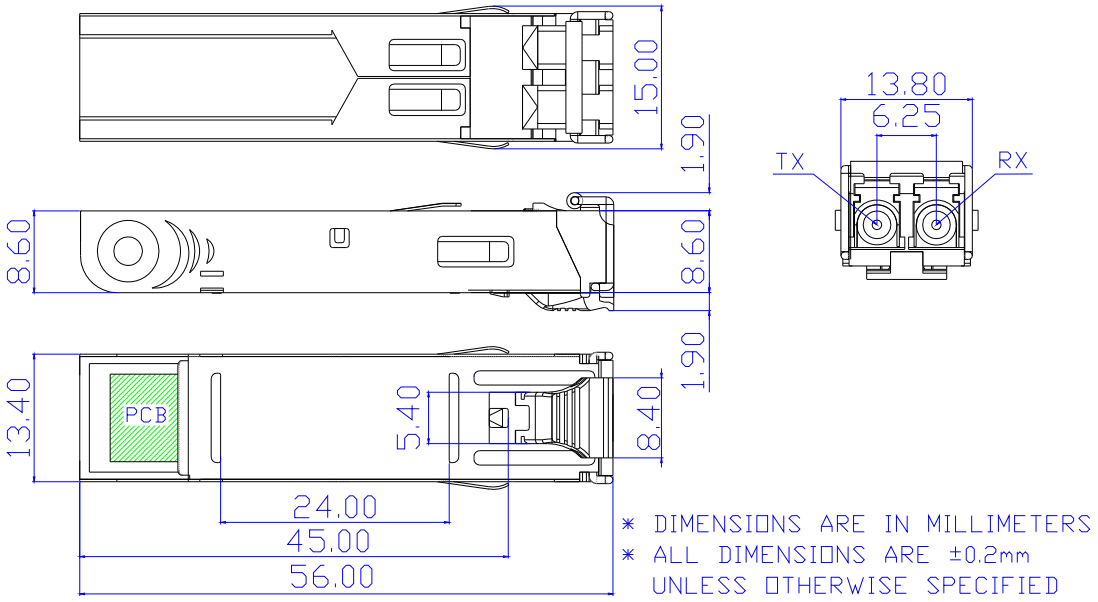

Ordering Information

AXSD-33C4-057x

Operating Temperature

1: 0~ 70℃

3: -40~ 85℃

Model No.	Wavelength	LD	I/O	LOS	Link	Temp.
AXSD-33C4-0571	1310nm	DFB	AC/AC	TTL	15km	0~70℃
AXSD-33C4-0573	1310nm	DFB	AC/AC	TTL	15km	-40~85℃

NOTE:

Distances are indicative only. Attenuation of 0.40 dB/km is used for the link length calculations. To calculate a more precise link budget based on specific conditions in your application, please refer to the Optical Specifications in Page#3~4.