AXFT-E454 1.25Gbps GEPON 1000Base-PX20 SFP OLT Transceiver

Product Overview

The AXFT-E454 is specifically designed for the high performance integrated duplex data link over a single optical fiber. These transceiver modules are compliant with the Small Form-factor Pluggable (SFP) Multisource Agreement (MSA). With the hot pluggability, these modules offer an easy way to be installed into SFP MSA compliant ports at any time without the interruption of the host equipments operating online.

The AXFT-E454 GE-PON OLT SFP transceivers is based on the IEEE 802.3ah 1000BASE-PX20 specification for bi-directional communication over a single fiber and incorporates a high performance 1490 nm continuous mode DFB transmitter and 1310 nm burst mode APD receiver.

.

Features

- **1.25G bi-direction single-fiber link**
- **Single SC receptacle**
- **1490nm Continuous-Mode Transmitter with DFB Laser, 1310nm Burst-Mode Receiver with APD-TIA**
- **20km point to multi-point transmission**
- **Resetless BM Receiver Design**
- **IEEE 802.3ah 1000BASE-PX20-D compliant**
- **SFP Multi-Source Agreement compliant**
- **Serial ID functionality support**
- **Class 1 laser safety standard IEC 825 compliant**

Applications

- **Gigabit Ethernet PON System**

Block diagram

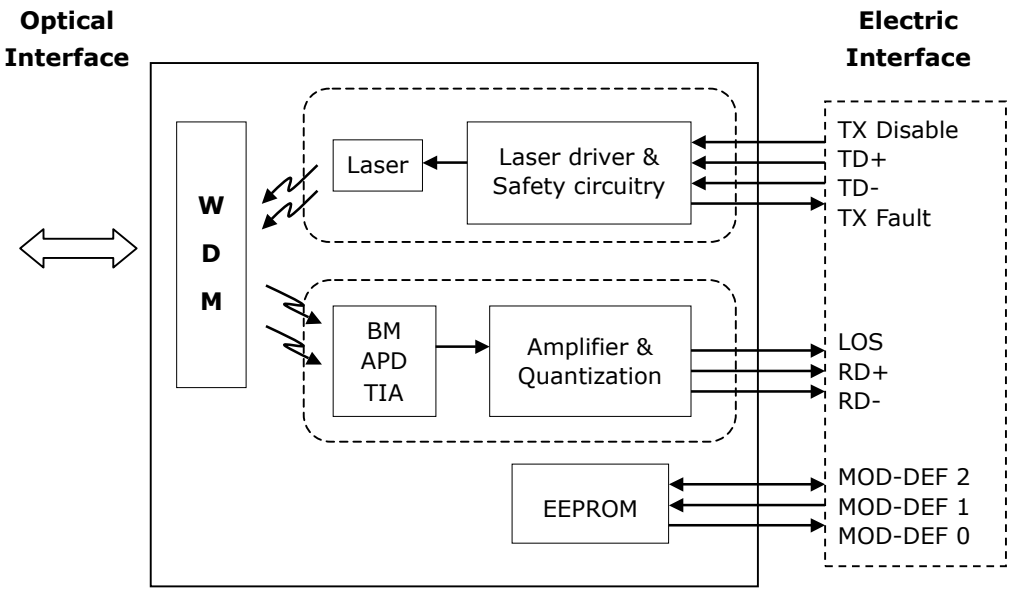

The transceiver is fundamentally consisted by two parts: transmitter and receiver. The transmitter features a TTL logic level Disable signal and a Fault indicator. The receiver features a TTL logic Loss of Signal (LOS) detection. For the access of serial identification information, an EEPORM is used to store the required data via the 2-wire serial CMOS EEPROM protocol. The detailed signal descriptions are listed in the following sections.

Absolute Maximum Ratings

Parameter	Symbol	Min.	Max.	Unit	Note
Storage Temperature	T_S	-40	85	℃	
Supply Voltage	V_{CC}	-0.5	4.5	V	
Storage Relative Humidity	RH	5	95	%	

Recommended Operating Conditions

Parameter	Symbol	Min.	Typ.	Max.	Unit	Note
Case Operating Temperature	T_C	0		70	℃	
Supply Voltage	VccT VccR	3.1	3.3	3.5	V	
Supply Current	I_{TX} +I_{RX}		150	300	mA	

Transmitter Electro-Optical Interface

Parameter	Symbol	Min.	Typ.	Max.	Unit	Note
Transmitter Differential Input Voltage	TD +/-	400		2400	mV	
Optical Output Power	P_o	2		7	dBm	1
Optical Extinction Ratio	E_R	9			dB	
Center Wavelength	λ_C	1480	1490	1500	nm	
Spectral Width (-20dB)	$\Delta\lambda$			1	nm	
Side Mode Suppression Ratio	SMSR	30			dB	
Optical Rise / Fall Time	t_r / t_f			260	ps	
Relative Intensity Noise	RIN			-115	dB/Hz	
Total Contributed Jitter	TJ			227	ps	
Tx_Fault - High	V_{Fault_H}	2		VccT	V	
Tx_Fault - Low	V_{Fault_L}	VeeT		VeeT+0.8	V	
Tx_Disable - High	$V_{Disable_H}$	2		VccT	V	
Tx_Disable - Low	$V_{Disable_L}$	VeeT		VeeT+0.8	V	

Notes:

1. Coupling into a 9/125μm single-mode fiber

Receiver Electro-Optical Interface

Parameter	Symbol	Min.	Typ.	Max.	Unit	Note
Receiver Differential Output Voltage	RD+/-	400		2000	mV	
Saturation Optical Power	$P_{IN}MAX$	-6			dBm	1
Receiver Sensitivity	$P_{IN}MIN$			-30	dBm	1
Receiver Settling Time	$T_{SETTLING}$			400	ns	2
Dynamic Range		-30		-6	dBm	3
Operating Center Wavelength	λ_c	1260		1360	nm	
Return Loss	RL	12			dB	
Receiver Settling Time	$T_{SETTLING}$			400	ns	
Receiver Loss of Signal-TTL Low	P_{RX_LOSD}			-30	dBm	
Receiver Loss of Signal-TTL High	P_{RX_LOSA}	-45			dBm	
Receiver Loss of Signal Hysteresis	P_{RX_LOSH}	0.5			dB	

Notes:

1. With BER better than or equal to 1×10^{-12}, measured in the center of the eye opening with PRBS 2^7 -1
2. See Figure 1
3. See Figure 2

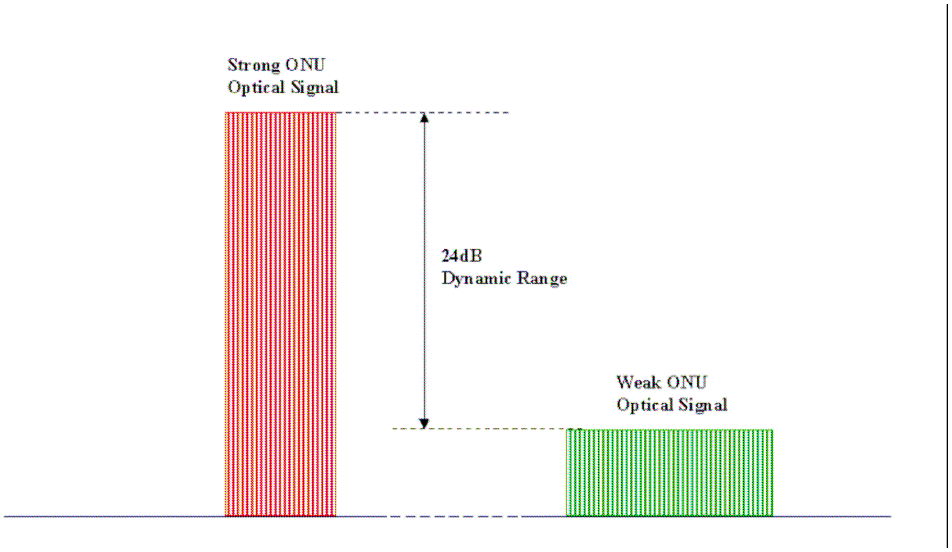

Figure 1

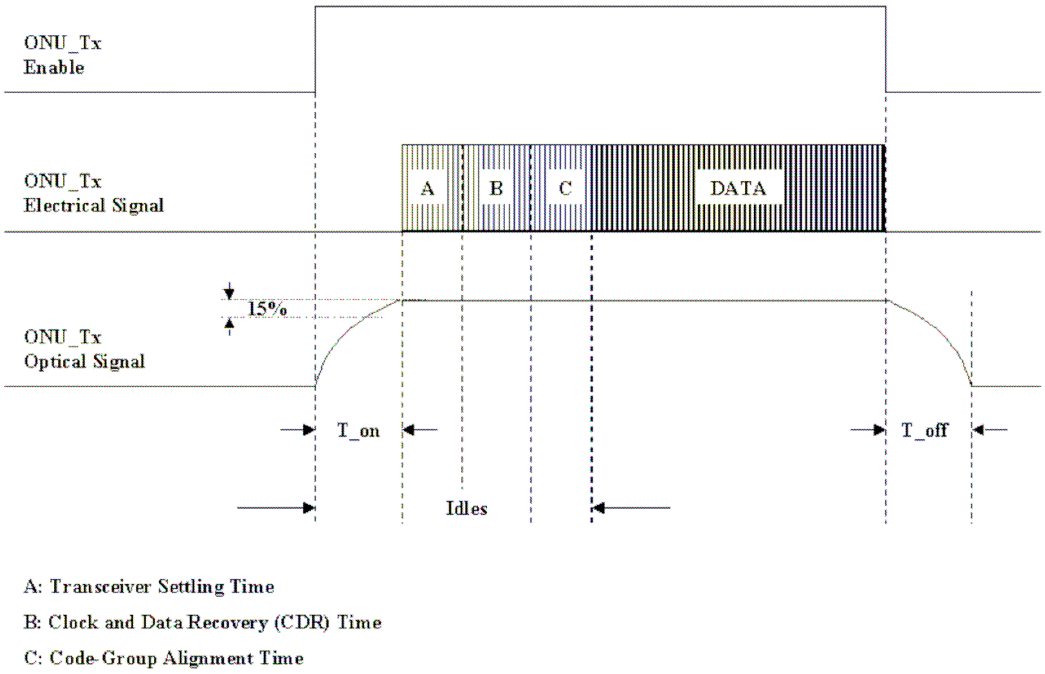

Figure 2

Pin Description

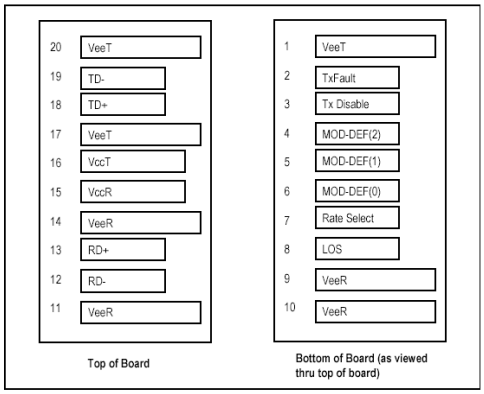

SFP Transceiver Electric Pad Layout

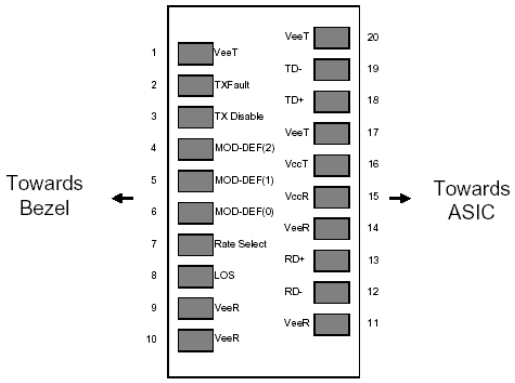

Diagram of Host Board Connector Block Pin Numbers and Names

Pin No.	Pin Name	Function	Plug Seq.	Notes
1	VeeT	Transmitter Ground	1	
2	TX Fault	Transmitter Fault Indication	3	1
3	TX Disable	Transmitter Disable	3	2
4	MOD-DEF 2	Module Definition 2	3	3
5	MOD-DEF 1	Module Definition 1	3	3
6	MOD-DEF 0	Module Definition 0	3	3
7	Rate Select	Select between full or reduced receiver bandwidth	3	4
8	LOS	Loss of Signal	3	TTL, 5
9	VeeR	Receiver Ground	1	6
10	VeeR	Receiver Ground	1	6
11	VeeR	Receiver Ground	1	6
12	RD-	Inv. Receiver Data Out	3	AC coupling, 7
13	RD+	Receiver Data Out	3	AC coupling, 7
14	VeeR	Receiver Ground	1	6
15	$V_{CC}R$	Receiver Power	2	8
16	$V_{CC}T$	Transmitter Power	2	8
17	VeeT	Transmitter Ground	1	6
18	TD+	Transmitter Data In	3	AC coupling, 9
19	TD-	Inv. Transmitter Data In	3	AC coupling, 9
20	VeeT	Transmitter Ground	1	6

Notes:

Plug Seq.: Pin engagement sequence during hot plugging.

1. TX Fault is an open collector/drain output, which should be pulled up with a 4.7K – 10KΩ resistor on the host board. Pull up voltage between 2.0V and VccT, R+0.3V. When high, output indicates a laser fault of some kind. Low indicates normal operation. In the low state, the output will be pulled to < 0.8V.
2. TX disable is an input that is used to shut down the transmitter optical output. It is pulled up within the module with a 4.7 – 10 KΩ resistor. Its states are:
   Low (0 – 0.8V): Transmitter on
   (>0.8, < 2.0V): Undefined
   High (2.0 – 3.465V): Transmitter Disabled
   Open: Transmitter Disabled
3. Mod-Def 0,1,2. These are the module definition pins. They should be pulled up with a 4.7K - 10KΩ resistor on the host board. The pull-up voltage shall be VccT or VccR
   Mod-Def 0 is grounded by the module to indicate that the module is present
   Mod-Def 1 is the clock line of two wire serial interface for serial ID
   Mod-Def 2 is the data line of two wire serial interface for serial ID
4. This is an optional input used to control the receiver bandwidth for compatibility with multiple data rates (most likely Fiber Channel 1x and 2x Rates). If implemented, the input will be internally pulled down with > 30kΩ resistor. The input states are:
   Low (0 - 0.8V): Reduced Bandwidth
   (>0.8, < 2.0V): Undefined
   High (2.0 V -3.465V): Full Bandwidth
   Open: Reduced Bandwidth
5. LOS (Loss of Signal) is an open collector/drain output, which should be pulled up with a 4.7K -10KΩ resistor. Pull up voltage between 2.0V and VccT, R+0.3V. When high, this output indicates the received optical power is below the worst-case receiver sensitivity (as defined by the standard in use). Low indicates normal operation. In the low state, the output will be pulled to < 0.8V.
6. VeeR and VeeT may be internally connected within the SFP module.
7. RD-/+: These are the differential receiver outputs. They are AC coupled 100Ω differential lines which should be terminated with 100Ω(differential) at the user SERDES. The AC coupling is done inside the module and is thus not required on the host board. The voltage swing on these lines will be between 370mV and 2000 mV differential (185mV - 1000 mV single ended) when properly terminated.
8. VccR and VccT are the receiver and transmitter power supplies. They are defined as 3.3V ±5% at the SFP connector pin. Maximum supply current is 300 mA. Recommended host board power supply filtering is shown below. Inductors with DC resistance of less than 1 ohm should be used in order to maintain the required voltage at the SFP input pin with 3.3V supply voltage. When the recommended supply filtering network is used, hot plugging of the SFP transceiver module will result in an inrush current of no more than 30 mA greater than the steady state value. VccR and VccT may be internally connected within the SFP transceiver module.
9. TD-/+: These are the differential transmitter inputs. They are AC-coupled, differential lines with 100ohm differential termination inside the module. The AC coupling is done inside the module and is thus not required on the host board. The inputs will accept differential swings of 500 mV - 2400 mV (250 mV - 1200 mV single-ended), though it is recommended that values between 500 and 1200 mV differential (250 mV- 600 mV single-ended) be used for best EMI performance.

Mechanical Dimensions (Units in mm)

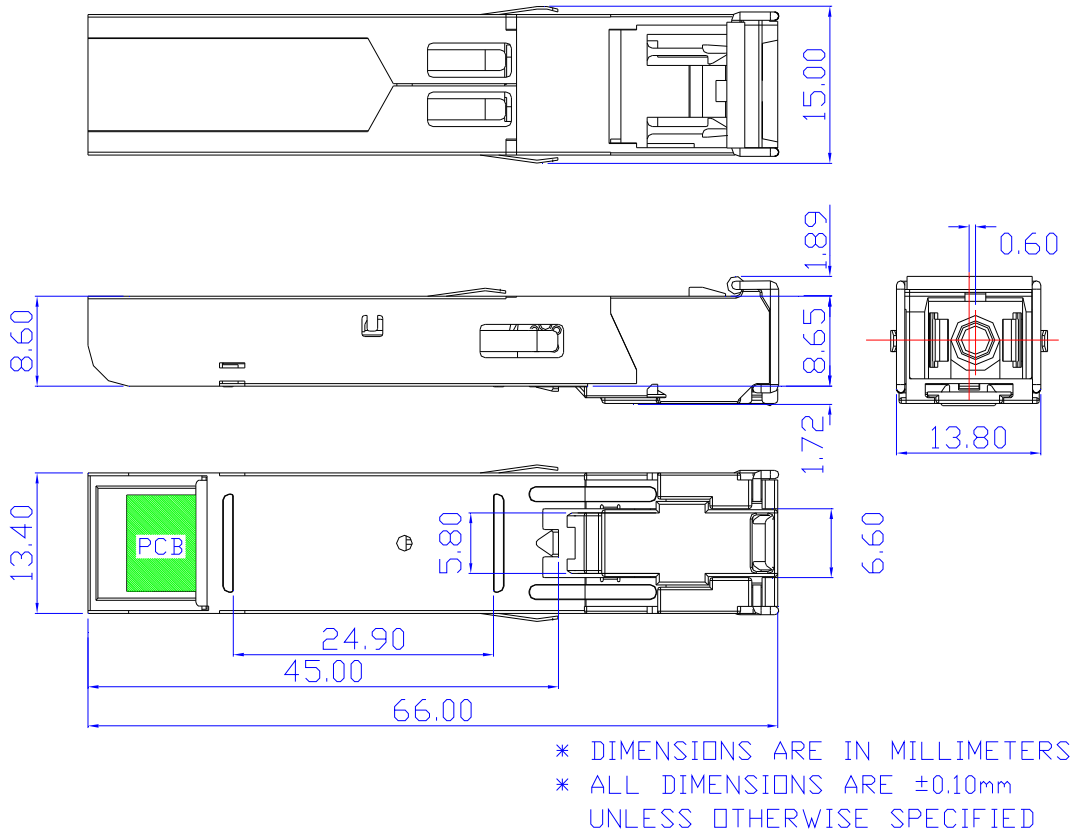

Ordering Information

AXFT-E454-2581

Product Code	Connector	Tx	Rx	Link	Temp.
AXFT-E454-2581	SC	1490nm	1310nm	20km	0~70℃