AXGT-R1x4-05yz 1000BASE-T and 10/100/1000BASE-T Copper SFP Transceiver

Product Overview

The electrical Small Form Factor Pluggable (SFP) transceiver module is specifically designed for the high performance integrated full duplex data link at 1.25Gbps over four pair Category 5 UTP. The transceiver module is compliant with the SFP MultiSource Agreement (MSA) and IEEE802.3:2002. With the hot pluggability, the module offers a flexible and easy way to be installed into SFP MSA compliant ports at any time without the interruption of the host equipments operating online.

The 1000BASE-T electrical SFP transceivers use an integrated RJ-45 connector with transformer and PHY IC. The link length is up to 100m over four pair Category 5 UTP cabling

Features

- Small Form Factor Pluggable (SFP) MSA Compliant,
- Compatible with IEEE 802.3:2002
- Compatible with 1000BASE-X and 1000BASE-T auto-negotiation
- Auto-detect MDI/MDI-X
- 10/100/1000BASE-T operation in host system with SGMII interface
- Link length up to 100m at 1.25Gbps with four pair Category 5 UTP cabling
- Internal PHY IC is configurable by host system via I^2C interface
- Single 3.3V power supply operation and low power dissipation

Applications

- Gigabit Ethernet over Cat 5 cable
- Switch to switch SerDes interface
- Switch to switch SGMII interface
- Switched backplane application

Block Diagram

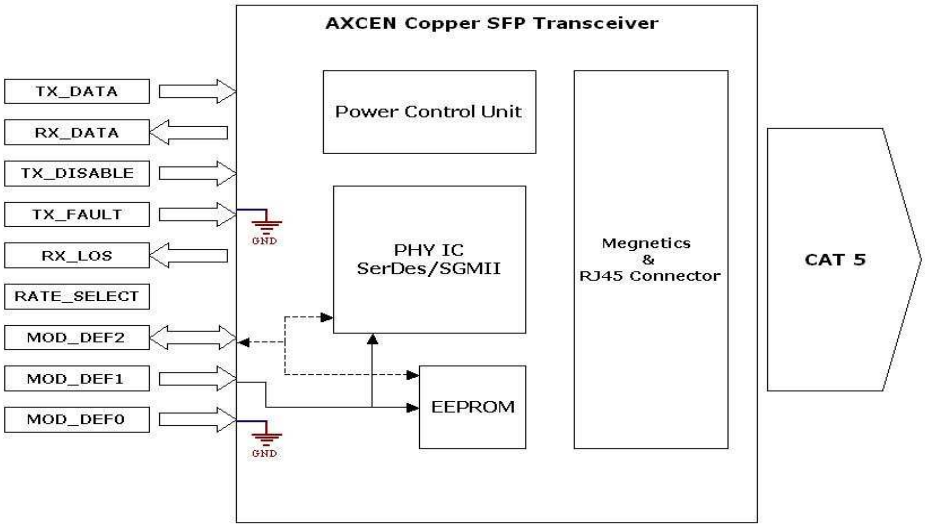

The transceiver is fundamentally consisted by three parts: RJ45+Magnetics, PHY IC and EEPROM. The transceiver module can be turned on by setting TX_DISABLE = LOW and can be reset by setting TX_DISABLE =High or OPEN. TX_FAULT is not supported in Copper products and always be connected to ground. For accessing the serial identification information, an EEPORM is used to store the required data via the 2-wire serial CMOS EEPROM protocol. The detailed signal descriptions are listed in the following sections. The registers of PHY IC are also accessible via the 2-wire serial CMOS EEPROM protocol at address ACh.

Absolute Maximum Ratings

Parameter	Symbol	Min.	Max.	Unit	Note
Storage Temperature	T_{st}	-40	+85	℃	
Supply Voltage	Vcc	-0.5	4.0	V	
Relative Humidity	RH	5	95	%	

Recommended Operating Conditions

Parameter	Symbol	Min.	Typ.	Max.	Unit	Note
Case Operating Temperature	T_{OP}	0		70	℃	Refer to ordering information
		0		85		
		-40		85		
Supply Voltage		3.15	3.3	3.45	V	
Supply Current	Is		330	385	mA	

General Specifications

Parameter	Symbol	Min.	Typ.	Max.	Unit	Note
Data Rate	DR	10		1000	Mb/sec	1
Bit Error Rate	BER			10^{-10}		

Notes:

1. 10/100/1000 BASE-T operation requires an SGMII interface with no clocks in the host system. With a SERDES interface that does not support SGMII, the module will operate at 1000BASE-T only.

High-Speed Electrical Interface, Host to SFP

Parameter	Symbol	Min.	Typ.	Max.	Unit	Note
TD+, TD- Input Voltage Swing	Vin+ Vin-	250		1200	mV	2
RD+, RD- Output Voltage Swing	Vout+ Vout-	250		800	mV	2
Rise Time (Receiver)	t_r		180	250	ps	1
Fall Time (Receiver)	t_f		180	250	ps	1
Tx Input Impedance	Zin		50		Ohm	2
Rx Output Impedance	Zout		50		Ohm	2

Notes:

1. 20% to 80% value
2. Single ended

High-Speed Electrical Interface, Cable to SFP

Parameter	Symbol	Min.	Typ.	Max.	Unit	Note
Transmission Frequency	ft		125		MHz	1
Tx Output Impedance	Zout.Tx		100		Ohm	2
Rx Output Impedance	Zin.Rx		100		Ohm	2

Notes:

1. 4D-PAM-5 encoding per IEEE802.3: 2002
2. Differential for frequencies ranging from 1MHz to 125MHz

Pin Description

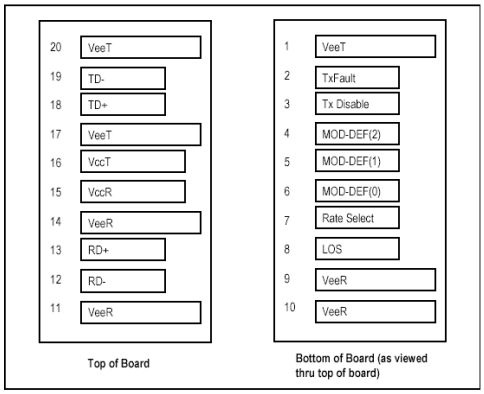

SFP Transceiver Electric Pad Layout

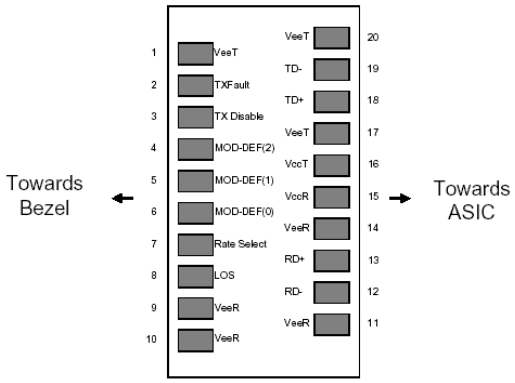

Diagram of Host Board Connector Block Pin Numbers and Names

Pin No.	Pin Name	Function	Plug Seq.	Notes
1	VeeT	Transmitter Ground	1	
2	TX Fault	Transmitter Fault Indication	3	1
3	TX Disable	Transmitter Disable	3	2
4	MOD_DEF 2	Module Definition 2	3	3
5	MOD_DEF 1	Module Definition 1	3	3
6	MOD_DEF 0	Module Definition 0	3	3
7	Rate Select	Select between full or reduced receiver bandwidth	3	4
8	RX_LOS	Receiver Loss of Signal	3	5
9	VeeR	Receiver Ground	1	6
10	VeeR	Receiver Ground	1	6
11	VeeR	Receiver Ground	1	6
12	RD -	Inv. Received Data Out	3	7
13	RD +	Received Data Out	3	7
14	VeeR	Receiver Ground	1	6
15	VccR	Receiver Power	2	8
16	VccT	Transmitter Power	2	8
17	VeeT	Transmitter Ground	1	6
18	TD +	Transmit Data In	3	9
19	TD -	Inv. Transmit Data In	3	9
20	VeeT	Transmitter Ground	1	6

Notes:

Plug Seq.: Pin engagement sequence during hot plugging.

1. TX Fault is not supported.
2. TX disable, an input used to reset the transceiver module, is pulled up within the module with a 4.7 – 10 K. resistor. Its states are:
   Low (0 – 0.8V): transceiver module on.
   (>0.8, < 2.0V): Undefined.
   High (2.0 – 3.465V): transceiver module disabled.
   Open: transceiver module disabled.
3. Mod-Def 0,1,2, are the module definition pins, which should be pulled up with a 4.7K - 10K resistor on the host board. The pull-up voltage shall be VccT or VccR.
   Mod-Def 0 is grounded in the module to indicate that the module is present.
   Mod-Def 1 is the clock line of two-wire serial interface for serial ID.
   Mod-Def 2 is the data line of two-wire serial interface for serial ID.
4. Rate select is not required for connection.
5. RX_LOS (Loss of Signal): LVTTL compatible with a maximum voltage of 2.5V. Being Activated on: AXGT-R154-05Ix, AXGT-R1T4-05Ix, AXGT-R154-05Jx. For those modules without LOS function, the LOS pin is internally attached to signal ground
6. VeeR and VeeT may be internally connected within the SFP module.
7. RD-/+, the differential receiver outputs, are AC coupled 100Ω differential lines which should be terminated with 100 Ω differential at the user SerDes. The AC coupling is done inside the module, thus not required on the host board. The voltage swing on these lines will be between 370 and 2000 mV differential (185 mV- 1000 mV single ended) when properly terminated.
8. VccR and VccT are the receiver and transmitter power supplies defined as 3.3V ±5% at the SFP connector pin. Maximum supply current is 385 mA. Recommended host board power supply filtering is shown below. Inductors with DC resistance of less than 1 Ω should be used in order to maintain the required voltage at the SFP input pin with 3.3V supply voltage. When the recommended supply filtering network is used, hot plugging of the SFP transceiver module will result in an inrush current of no more than 30 mA greater than the steady state value. VccR and VccT may be internally connected within the SFP transceiver module.
9. TD-/+, the differential transmitter inputs, are AC-coupled differential lines with 100Ω differential termination inside the module. The AC coupling is done inside the module, thus not required on the host board. The inputs will accept differential swings of 500 – 2400mV (250 mV - 1200 mV single ended), though it is recommended that values between 500 and 1200mV differential (250 – 600mV single ended) be used for best EMI performance.

Mechanical Dimensions (Units in mm)

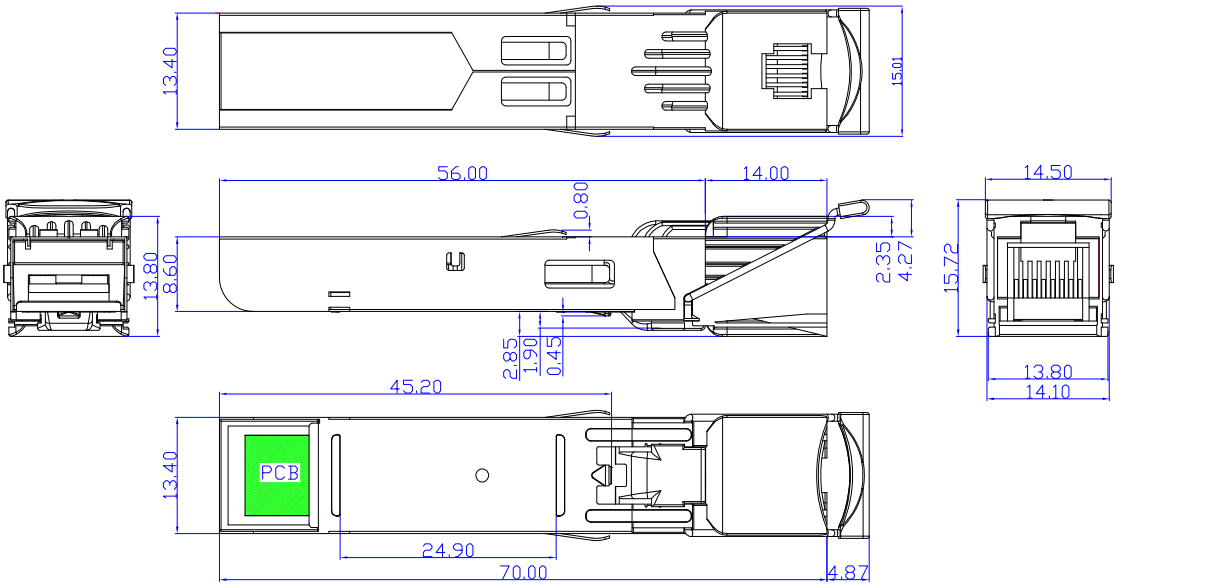

* DIMENSIONS ARE IN MILLIMETERS
* ALL DIMENSIONS ARE ±0.10mm
UNLESS OTHERWISE SPECIFIED

Ordering Information

AXGT-R1x4-05yz

Operating Temperature

1: 0 ~ 70℃

B: 0 ~ 85℃

3: -40 ~ 85℃

LOS Function / 1000BASE-X Auto-Negotiation (for SerDes)

H: Without LOS function / 1000BASE-X Auto-Negotiation ON

I : With LOS function / 1000BASE-X Auto-Negotiation OFF

J : With LOS function / 1000BASE-X Auto-Negotiation ON

Interface to Host

5: SerDes

T: SGMII

Model No.	Speed Mode	MAC Interface	Auto-Negotiation Enable by default (1000 BASE -X) *2	Link Indicator on RX_LOS pin	Temp.
AXGT-R154-05H1	1000Mbps *1	SERDES	Yes	No	0~70℃
AXGT-R154-05HB	1000Mbps *1	SERDES	Yes	No	0~85℃
AXGT-R154-05H3	1000Mbps *1	SERDES	Yes	No	-40~85℃
AXGT-R154-05I1	1000Mbps *1	SERDES	No	Yes	0~70℃
AXGT-R154-05IB	1000Mbps *1	SERDES	No	Yes	0~85℃
AXGT-R154-05I3	1000Mbps *1	SERDES	No	Yes	-40~85℃
AXGT-R154-05J1	1000Mbps *1	SERDES	Yes	Yes	0~70℃
AXGT-R154-05JB	1000Mbps *1	SERDES	Yes	Yes	0~85℃
AXGT-R154-05J3	1000Mbps *1	SERDES	Yes	Yes	-40~85℃
AXGT-R1T4-05I1	10/100/1000Mbps	SGMII	Yes	Yes	0~70℃
AXGT-R1T4-05IB	10/100/1000Mbps	SGMII	Yes	Yes	0~85℃
AXGT-R1T4-05I3	10/100/1000Mbps	SGMII	Yes	Yes	-40~85℃

*** NOTE:**

1. 10/100/1000 BASE -T operation requires the host system to have an SGMII interface with no clocks, and the module PHY to be configured by the host system. With a SERDES interface that does not support SGMII, the module will operate at 1000BASE-T only.
2. 1000 BASE-T auto-negotiation is always activated.