AXFE-R1x4-05Hy
100BASE-TX Copper SFP Transceiver

Product Overview

The electrical Small Form Factor Pluggable (SFP) transceiver module is specifically designed for converting 100BASE-FX NRZI port interface to 10/100BASE-TX interface with RJ45 connector

The transceiver module is compliant with the SFP MultiSource Agreement (MSA) and IEEE802.3u. With hot pluggability, the module offers a flexible and easy way to be installed into SFP MSA compliant ports at any time without the interruption of the host equipments operating online.

The Copper SFP transceivers use an integrated RJ-45 connector with transformer and PHY IC.

Features

- Small Form Factor Pluggable (SFP) MSA Compliant,
- Compatible with IEEE 802.3u
- 100m transmission over UTP CAT 5 cable
- Capable of 100BASE-TX auto-negotiation
- Single 3.3V power supply operation and low power dissipation

Applications

- Media Converter
- 100BASE-TX LAN applications

Block Diagram

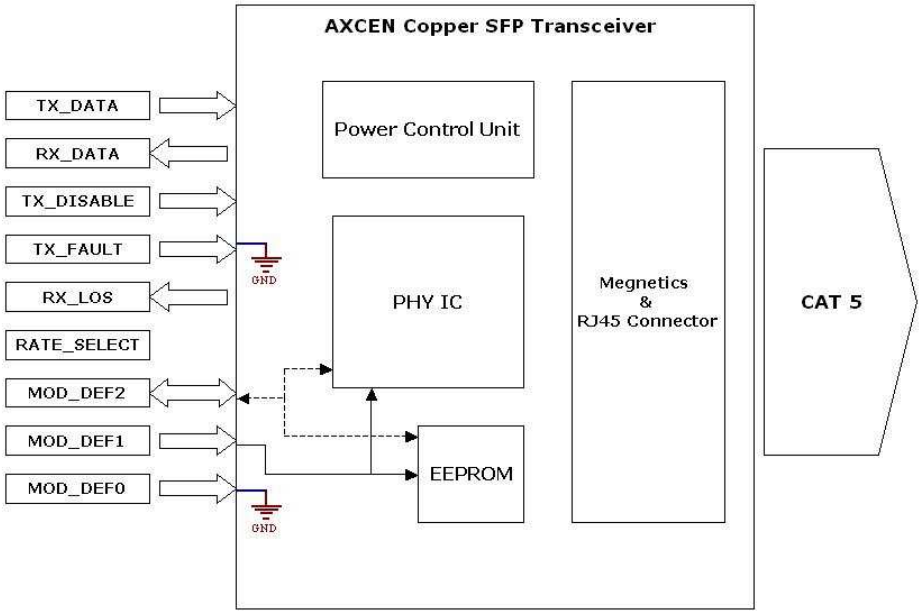

The transceiver is fundamentally consisted by three parts: RJ45+Magnetics, PHY IC and EEPROM. The transceiver module can be turned on by setting TX_DISABLE = LOW and can be reset by setting TX_DISABLE =High or OPEN. TX_FAULT is not supported in Copper products and always be connected to ground. LOS (Loss of Signal) detection is optional. For accessing the serial identification information, an EEPORM is used to store the required data via the 2-wire serial CMOS EEPROM protocol. The detailed signal descriptions are listed in the following sections.

Absolute Maximum Ratings

Parameter	Symbol	Min.	Max.	Unit	Note
Storage Temperature	T_{st}	-40	+85	℃	
Supply Voltage	Vcc	-0.5	3.6	V	
Relative Humidity	RH	5	95	%	

Recommended Operating Conditions

Parameter	Symbol	Min.	Typ.	Max.	Unit	Note
Case Operating Temperature	T_{OP}	0		70	℃	Refer to ordering information
		-5		70		
Supply Voltage	Vcc	3.15	3.3	3.45	V	
Supply Current	Is		190	250	mA	

General Specifications

Parameter	Symbol	Min.	Typ.	Max.	Unit	Note
Data Rate	DR	10		100	Mb/sec	
Bit Error Rate	BER			10^{-10}		

High-Speed Electrical Interface, Host to SFP

Parameter	Symbol	Min.	Typ.	Max.	Unit	Note
TD+, TD- Input Voltage Swing	Vin+ Vin-	250		1200	mV	2
RD+, RD- Output Voltage Swing	Vout+ Vout-	250		800	mV	2
Rise Time (Receiver)	t_r			2	ns	1
Fall Time (Receiver)	t_f			2	ns	1
Tx Input Impedance	Zin		50		Ohm	2
Rx Output Impedance	Zout		50		Ohm	2

Notes:

1. 10% to 90% value
2. Single ended

High-Speed Electrical Interface, Cable to SFP

Parameter	Symbol	Min.	Typ.	Max.	Unit	Note
Transmission Frequency	ft		125		MHz	1
Tx Output Impedance	Zout.Tx		100		Ohm	2
Rx Output Impedance	Zin.Rx		100		Ohm	2

Notes:

1. MLT-3 encoding per IEEE802.3u
2. Differential for frequencies ranging from 1MHz to 125MHz

Pin Description

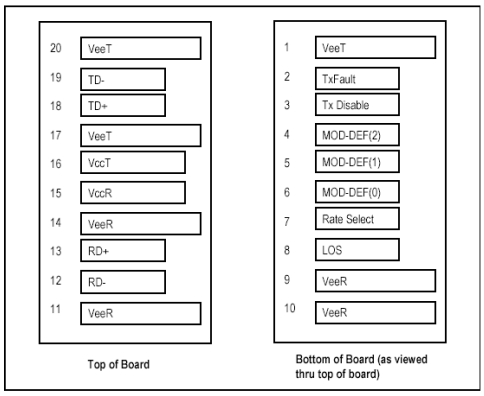

SFP Transceiver Electric Pad Layout

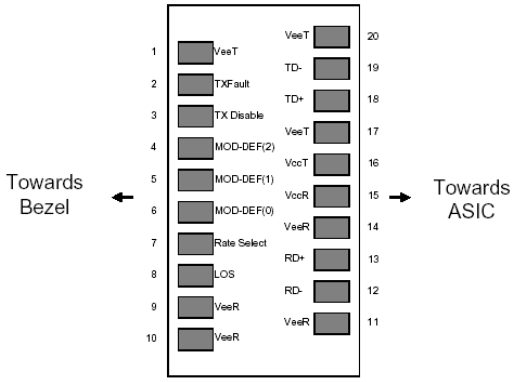

Diagram of Host Board Connector Block Pin Numbers and Names

Pin No.	Pin Name	Function	Plug Seq.	Notes
1	VeeT	Transmitter Ground	1	
2	TX Fault	Transmitter Fault Indication	3	1
3	TX Disable	Transmitter Disable	3	2
4	MOD_DEF 2	Module Definition 2	3	3
5	MOD_DEF 1	Module Definition 1	3	3
6	MOD_DEF 0	Module Definition 0	3	3
7	Rate Select	Select between full or reduced receiver bandwidth	3	4
8	RX_LOS	Receiver Loss of Signal	3	5
9	VeeR	Receiver Ground	1	6

10	VeeR	Receiver Ground	1	6
11	VeeR	Receiver Ground	1	6
12	RD -	Inv. Received Data Out	3	7
13	RD +	Received Data Out	3	7
14	VeeR	Receiver Ground	1	6
15	VccR	Receiver Power	2	8
16	VccT	Transmitter Power	2	8
17	VeeT	Transmitter Ground	1	6
18	TD +	Transmit Data In	3	9
19	TD -	Inv. Transmit Data In	3	9
20	VeeT	Transmitter Ground	1	6

Notes:

Plug Seq.: Pin engagement sequence during hot plugging.

1. TX Fault is not supported.
2. TX disable, an input used to reset the transceiver module, is pulled up within the module with a 4.7 – 10 K. resistor. Its states are:
   Low (0 – 0.8V): transceiver module on.
   (>0.8, < 2.0V): Undefined.
   High (2.0 – 3.465V): transceiver module disabled.
   Open: transceiver module disabled.
3. Mod-Def 0,1,2, are the module definition pins, which should be pulled up with a 4.7K - 10K resistor on the host board. The pull-up voltage shall be VccT or VccR.
   Mod-Def 0 is grounded in the module to indicate that the module is present.
   Mod-Def 1 is the clock line of two-wire serial interface for serial ID.
   Mod-Def 2 is the data line of two-wire serial interface for serial ID.
4. Rate select is not required for connection.
5. RX_LOS (Loss of Signal): LVTTL compatible with a maximum voltage of 3.3V. Being Activated on: AXFE-R1S4-05Hy. For AXFE-R114-05H1, the LOS pin is internally attached to signal ground
6. VeeR and VeeT may be internally connected within the SFP module.
7. RD-/+, the differential receiver outputs, are AC coupled 100Ω differential lines which should be terminated with 100 Ω differential at the user SerDes. The AC coupling is done inside the module, thus not required on the host board. The voltage swing on these lines will be between 370 and 2000 mV differential (185 mV- 1000 mV single ended) when properly terminated.
8. VccR and VccT are the receiver and transmitter power supplies defined as 3.3V ±5% at the SFP connector pin. Maximum supply current is 385 mA. Recommended host board power supply filtering is shown below. Inductors with DC resistance of less than 1 Ω should be used in order to maintain the required voltage at the SFP input pin with 3.3V supply voltage. When the recommended supply filtering network is used, hot plugging of the SFP transceiver module will result in an inrush current of no more than 30 mA greater than the steady state value. VccR and VccT may be internally connected within the SFP transceiver module.
9. TD-/+, the differential transmitter inputs, are AC-coupled differential lines with 100Ω differential termination inside the module. The AC coupling is done inside the module, thus not required on the host board. The inputs will accept differential swings of 500 – 2400mV (250 mV - 1200 mV single ended), though it is recommended that values between 500 and 1200mV differential (250 – 600mV single ended) be used for best EMI performance.

Mechanical Dimensions (Units in mm)

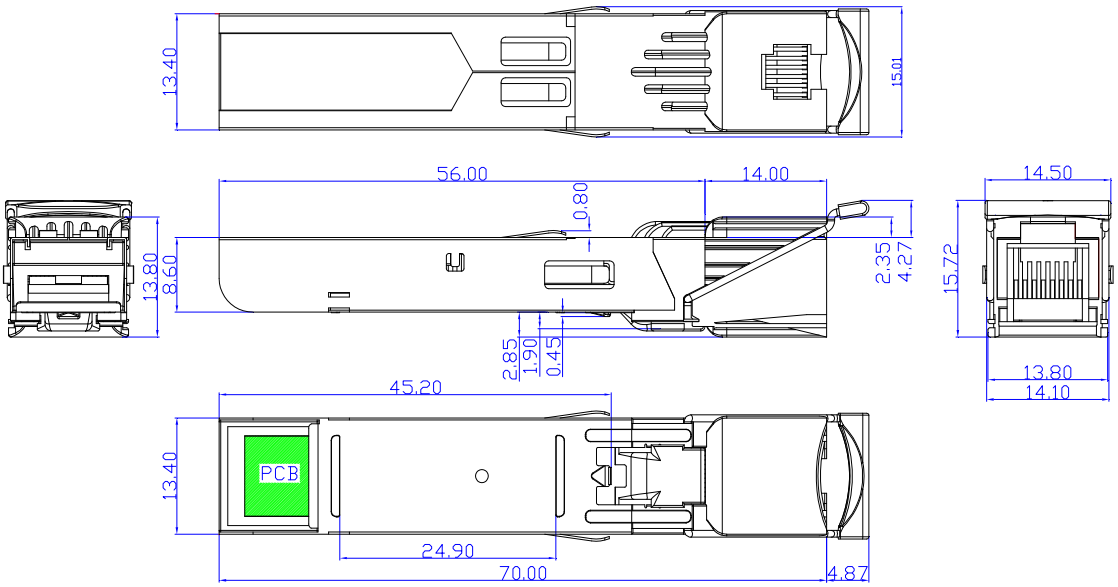

* DIMENSIONS ARE IN MILLIMETERS
* ALL DIMENSIONS ARE ±0.10mm UNLESS OTHERWISE SPECIFIED

Ordering Information

AXFE-R1x4-05Hy

Operating Temperature

1: 0 ~ 70℃

E: -5 ~ 70℃

LOS Function

1: Without LOS function

S : With LOS function

Model No.	Speed	LOS Function	Temp.
AXFE-R114-05H1	10/100 Mbps	OFF	0~70℃
AXFE-R1S4-05H1	10/100 Mbps	ON	0~70℃
AXFE-R1S4-05HE	10/100 Mbps	ON	-5~70℃