AXGE-1651 1.25Gbps Single Fiber Bi-directional, 1x9, SC Receptacle, ONU Transceiver

Product Overview

The AXGE-1651 family of 1x9 transceiver modules is specifically designed for the high performance integrated duplex data link over single-mode optical fiber. These transceiver modules are compliant with the Multisource Agreement (MSA). These modules are designed to provide 1000Base-BX10 compliant in Fast Ethernet applications.

The AXGE-1651 BiDi 1x9 transceivers using a 1310nm FP laser diode and 1550nm PIN diode enable data transmission up to 20km on a single-mode (9/125μm) optical fiber.

Applications

- **FTTx**
- **Gigabit Ethernet**
- **High speed I/O for file server**
- **Switch backbone application**

Features

- **1.25Gbps bi-directional single fiber link**
- **Low Profile plastic molded package**
- **Single SC receptacle**
- **1310nm FP transmitter, 1550nm PIN receiver**
- **1.25Gbps IEEE 802.3ah 1000BASE-BX10-U compliant**
- **Single +3.3V power supply operation**
- **DC or AC coupling PECL level inputs and outputs**
- **PECL or TTL signal detect output**
- **Class 1 laser safety standard IEC 60825 compliant**
- **10km/20km link on a single-mode fiber**
- **Low power dissipation**

Block diagram

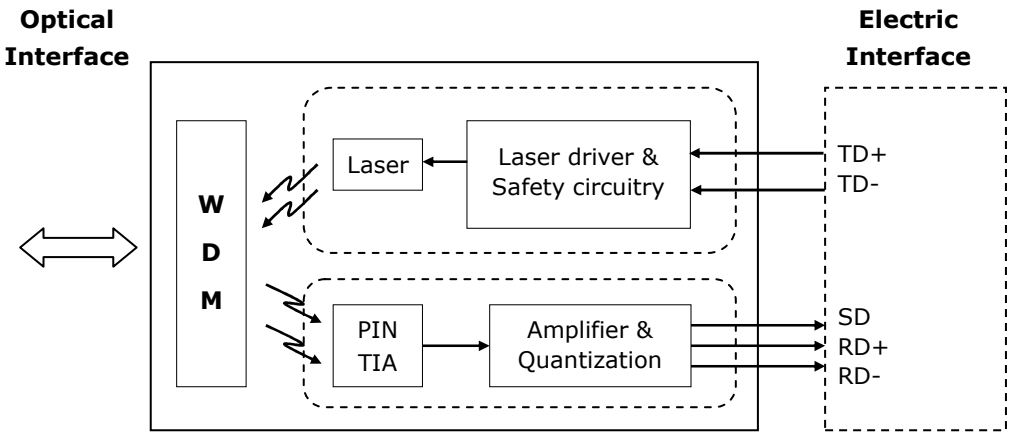

The transceiver is fundamentally consisted by two parts: transmitter and receiver. The transmitter features LVPECL differential data inputs (TD+ and TD-). The receiver features LVPECL differential data outputs (RD+ and RD-) and LVPECL or TTL for signal detect output (SD).

Absolute Maximum Ratings

Parameter	Symbol	Min.	Max.	Unit	Note
Storage Temperature	T_S	-40	+85	℃	
Supply Voltage	$V_{CC}T$ $V_{CC}R$	-0.5	4.0	V	
Storage Relative Humidity	RH	5	95	%	
Lead Soldering Temperature	T_{ls}		260	℃	
Lead Soldering Time	t_{ls}		10	sec	

Recommended Operating Conditions

Parameter	Symbol	Min.	Typ.	Max.	Unit	Note
Case Operating Temperature	T_C	0		70	℃	Refer to ordering information
		-40		85		
Supply Voltage	V_{CC}	3.1	3.3	3.5	V	
Supply Current	$I_{TX}+I_{RX}$		150	300	mA	

Transmitter Electro-Optical Interface

Parameter		Symbol	Min.	Typ.	Max.	Unit	Note
Data Input Voltage – Low		V_L-V_{CC}	-1.81		-1.475	V	
Data Input Voltage - High		V_H-V_{CC}	-1.165		-0.880	V	
Optical Output Power	10km	P_O	-9		-3	dBm	1
	20km		-8		-2		
Optical Extinction Ratio		E_R	9			dB	
Center Wavelength		λ_C	1270	1310	1355	nm	
Spectral Width (RMS)		$\Delta\lambda$			2.5	nm	
Optical Rise / Fall Time		t_r / t_f			260	ps	2
Total Contributed Jitter		TJ			227	ps	

Notes:

1. Coupling into a 9/125μm single-mode fiber.
2. 20% to 80% value

Receiver Electro-Optical Characteristics

Parameter		Symbol	Min.	Typ.	Max.	Unit	Note
Receiver Overload		P_{IN}MAX	-2			dBm	1
Receiver Sensitivity	10km	P_{IN}MIN			-20	dBm	1
	20km				-23		
Operating Center Wavelength		λ_c	1480		1580	nm	
Receiver Output Voltage - Low		V_{OL}-V_{CC}	-2		-1.58	V	
Receiver Output Voltage - High		V_{OH}-V_{CC}	-1.1		-0.74	V	
Receiver Signal Detect – Low		P_{RX_SDD}	-35			dBm	
Receiver Signal Detect – High		P_{RX_SDA}			-23	dBm	
Receiver Signal Detect - Hysteresis		P_{RX_SDH}	0.5			dB	

Notes:

1. With BER better than or equal to 1×10^{-12}, measured in the center of the eye opening with 2^7 –1 PRBS

Pin Description

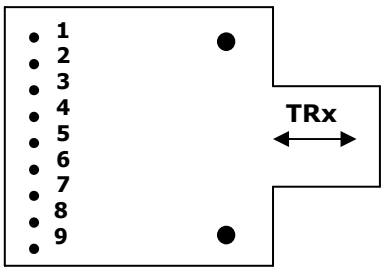

Top View

Pin No	Pin Name	Function	Notes
1	RxV_{EE}	Receiver signal ground	
2	RD+	Receiver data out	PECL
3	RD-	Receiver data out bar	PECL
4	SD	Signal detect	
5	RxV_{CC}	Receiver power supply	
6	TxV_{CC}	Transmitter power supply	
7	TD-	Transmitter data in bar	PECL
8	TD+	Transmitter data in	PECL
9	TxV_{EE}	Transmitter signal ground	

Recommended Interface Circuit

TX DC Coupling / RX DC Coupling, PECL Signal Detect

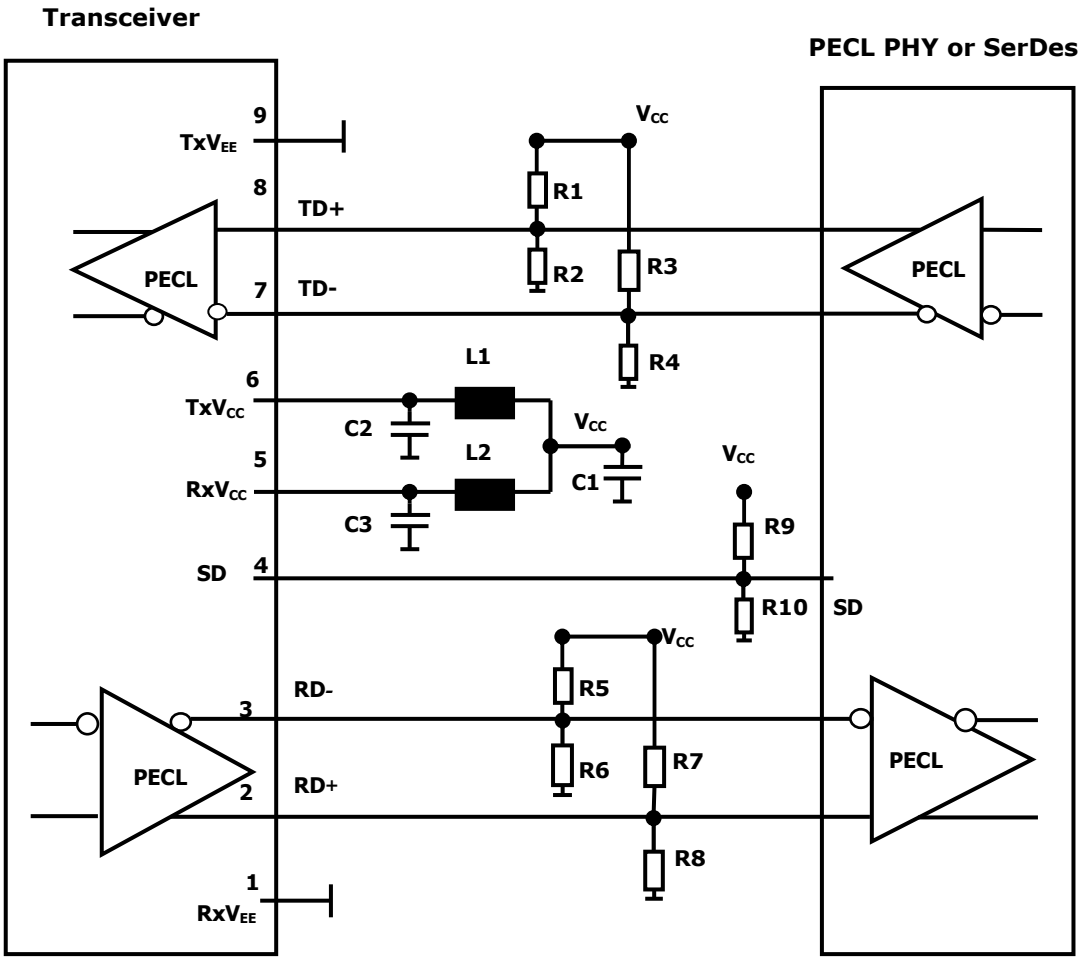

Notes:

R1/R3/R5/R7/R9=130 ohm @3.3V (Depends on SerDes chip used.)

=82 ohm @5V (Depends on SerDes chip used.)

R2/R4/R6/R8/R10=82 ohm @3.3V (Depends on SerDes chip used.)

=130 ohm @5V (Depends on SerDes chip used.)

C1=10uF

C2/C3=0.1uF

L1=L2=1uH

TX AC Coupling / RX AC Coupling, TTL Signal Detect

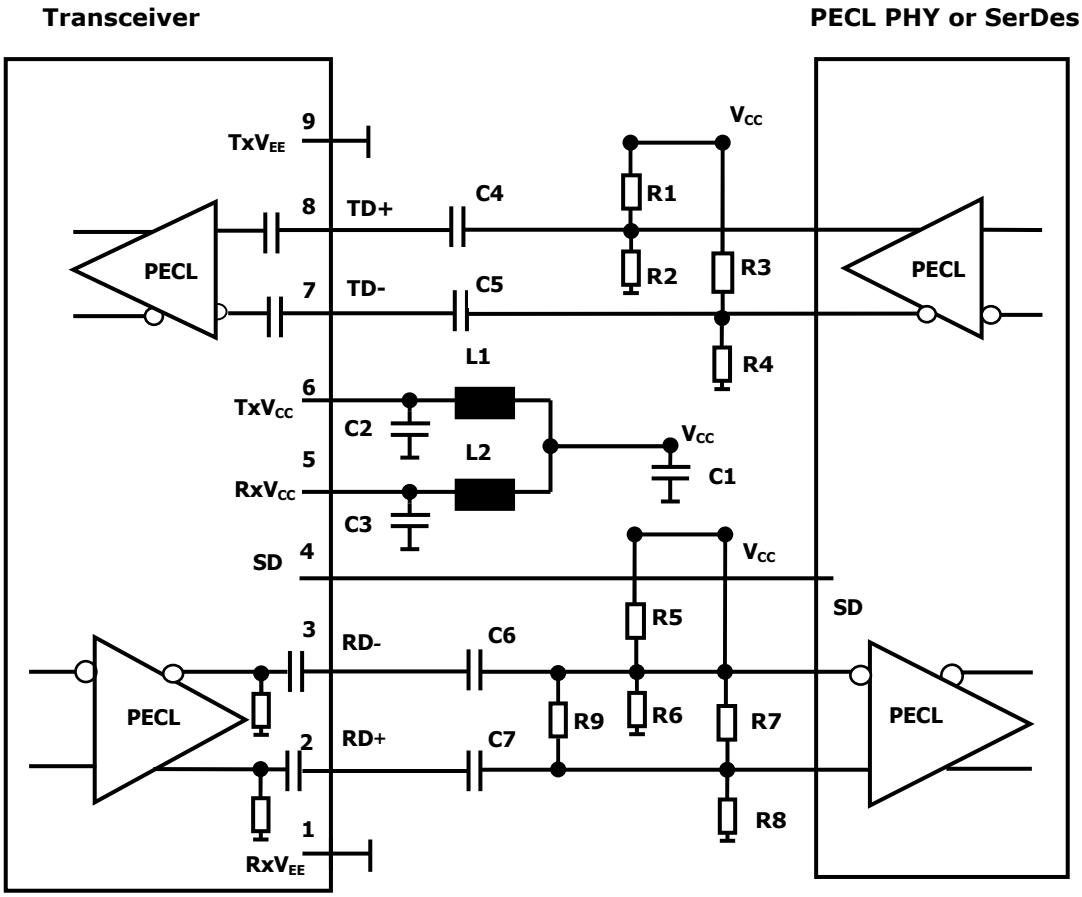

Notes:

R1/R3/R5/R7/R9=130 ohm @3.3V (Depends on SerDes chip used.)

=82 ohm @5V (Depends on SerDes chip used.)

R2/R4/R6/R8/R10=82 ohm @3.3V (Depends on SerDes chip used.

=130 ohm@5V (Depends on SerDes chip used.)

R9 =100 ohm (Depends on SerDes chip used.

C1=10uF

C2/C3/C4/C5/C6/C7=0.1uF

L1=L2=1uH

Mechanical Dimensions (Units in mm)

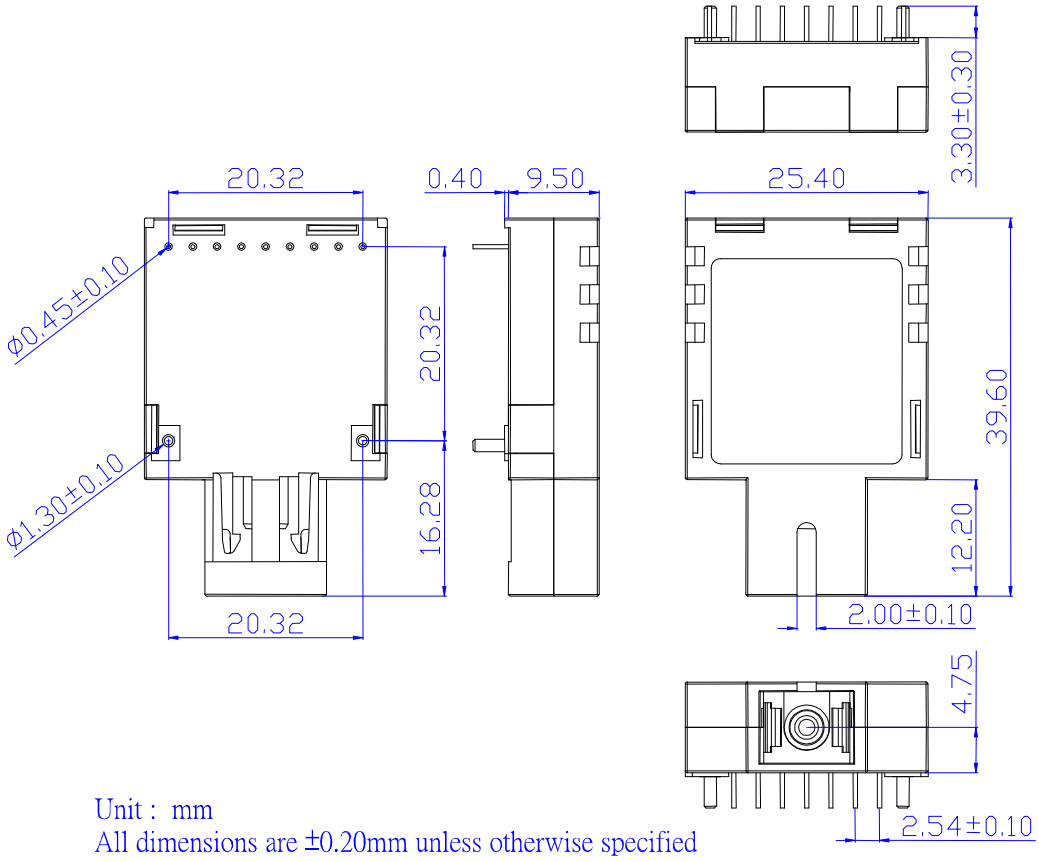

Ordering Information

AXGE–1651-0xyz

Operating temperature

1: 0~70℃

3: -40~85℃

Transmission distance

3: 10km

8: 20km

I/O coupling and SD level

1: DC/DC, PECL

5: AC/AC, TTL

Model No.	Tx	LD	Rx	I/O	SD	Link	Temp.
AXGE-1651-0131	1310nm	FP	1550nm	DC/DC	PECL	10km	0~70℃
AXGE-1651-0133	1310nm	FP	1550nm	DC/DC	PECL	10km	-40~85℃
AXGE-1651-0181	1310nm	FP	1550nm	DC/DC	PECL	20km	0~70℃
AXGE-1651-0183	1310nm	FP	1550nm	DC/DC	PECL	20km	-40~85℃
AXGE-1651-0531	1310nm	FP	1550nm	AC/AC	TTL	10km	0~70℃
AXGE-1651-0533	1310nm	FP	1550nm	AC/AC	TTL	10km	-40~85℃
AXGE-1651-0581	1310nm	FP	1550nm	AC/AC	TTL	20km	0~70℃
AXGE-1651-0583	1310nm	FP	1550nm	AC/AC	TTL	20km	-40~85℃