AXFT-1721 125Mbps Single Fiber Bi-directional, 1x9, SC Receptacle, OLT Transceiver

Product Overview

The AXFT-1721 family of 1x9 transceiver modules is specifically designed for the high performance integrated duplex data link over single-mode optical fiber. These transceiver modules are compliant with the Multisource Agreement (MSA). These modules are designed to provide 100Base-BX10 compliant in Fast Ethernet applications.

The AXFT-1721 BiDi 1x9 transceivers using a 1550nm FP laser diode and 1310nm PIN diode enable data transmission up to 20km on a single-mode (9/125μm) optical fiber.

Applications

- **FTTx**
- **Fast Ethernet**
- **ATM switches and routers**
- **SONET/SDH switch infrastructure**

Features

- **125Mbps~155Mbps bi-directional single fiber link**
- **Low Profile plastic molded package**
- **Single SC receptacle**
- **1550nm FP transmitter, 1310nm PIN receiver**
- **125Mbps IEEE 802.3ah 100BASE-BX10-D compliant**
- **125Mbps ITU-T G.985 Class S compliant**
- **155Mbps OC-3 IR-1/STM S-1.1 compliant**
- **Single +3.3V power supply operation**
- **DC coupling PECL level inputs and outputs**
- **PECL signal detect output**
- **Class 1 laser safety standard IEC 60825 compliant**
- **10km/20km link on a single mode fiber**
- **Low power dissipation**

Block diagram

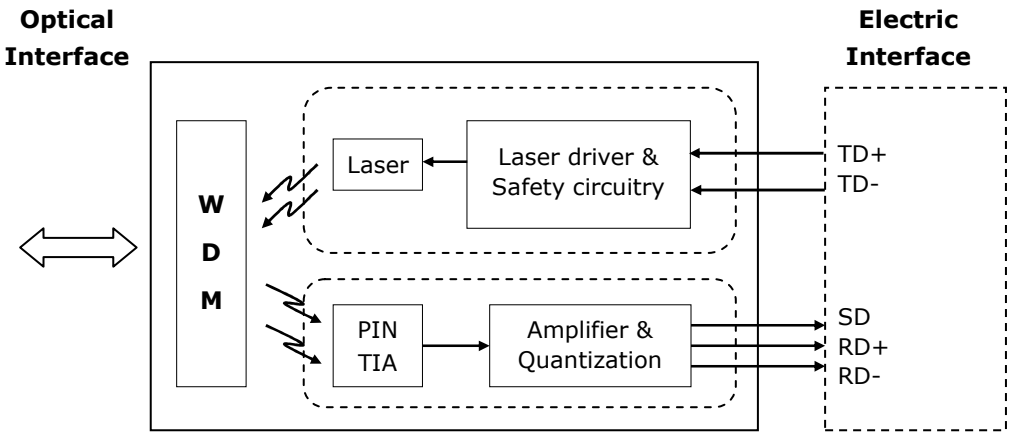

The transceiver is fundamentally consisted by two parts: transmitter and receiver. The transmitter features LVPECL differential data inputs (TD+ and TD-). The receiver features LVPECL differential data outputs (RD+ and RD-) and LVPECL for signal detect output (SD).

Absolute Maximum Ratings

Parameter	Symbol	Min.	Max.	Unit	Note
Storage Temperature	T_S	-40	+85	℃	
Supply Voltage	$V_{CC}T$ $V_{CC}R$	-0.5	4.0	V	
Storage Relative Humidity	RH	5	95	%	
Lead Soldering Temperature	T_{ls}		260	℃	
Lead Soldering Time	t_{ls}		10	sec	

Recommended Operating Conditions

Parameter	Symbol	Min.	Typ.	Max.	Unit	Note
Case Operating Temperature	T_C	0		70	℃	Refer to ordering information
		-40		85		
Supply Voltage	V_{CC}	3.1	3.3	3.5	V	
Supply Current	$I_{TX}+I_{RX}$		150	300	mA	

Transmitter Electro-Optical Interface

Parameter		Symbol	Min.	Typ.	Max.	Unit	Note
Data Input Voltage – Low		V_L-V_{CC}	-1.81		-1.475	V	
Data Input Voltage - High		V_H-V_{CC}	-1.165		-0.880	V	
Optical Output Power		P_O	-14		-8	dBm	1
Optical Extinction Ratio		E_R	9			dB	
Center Wavelength		λ_C	1480		1580	nm	
Spectral Width (RMS)	10km	$\Delta\lambda$			4.6	nm	
	20km				3		
Optical Rise / Fall Time		t_r / t_f			2	ns	2

Notes:

1. Coupling into a 9/125μm single-mode fiber.
2. 10% to 90% value

Receiver Electro-Optical Characteristics

Parameter		Symbol	Min.	Typ.	Max.	Unit	Note
Receiver Overload		P_{IN}MAX	-3			dBm	1
Receiver Sensitivity	10km	P_{IN}MIN			-28	dBm	1
	20km				-32		
Operating Center Wavelength		λ_c	1260		1360	nm	
Receiver Output Voltage - Low		V_{OL}-V_{CC}	-2		-1.58	V	
Receiver Output Voltage - High		V_{OH}-V_{CC}	-1.1		-0.74	V	
Receiver Signal Detect – Low		P_{RX_SDD}	-45			dBm	
Receiver Signal Detect – High		P_{RX_SDA}			-32	dBm	
Receiver Signal Detect - Hysteresis		P_{RX_SDH}	0.5			dB	
Signal Detect Output Voltage - Low		V_{SDL}-V_{CC}	-2		-1.58	V	
Signal Detect Output Voltage - High		V_{SDH}-V_{CC}	-1.1		-0.74	V	

Notes:

1. With BER better than or equal to 1×10^{-12}, measured in the center of the eye opening with 2^7 –1 PRBS

Pin Description

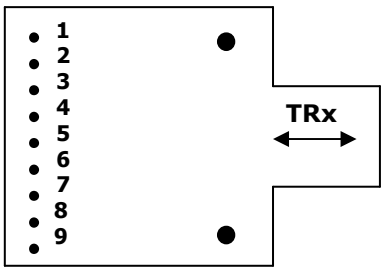

Top View

Pin No	Pin Name	Function	Notes
1	RxV_{EE}	Receiver signal ground	
2	RD+	Receiver data out	PECL
3	RD-	Receiver data out bar	PECL
4	SD	Signal detect	PECL
5	RxV_{CC}	Receiver power supply	
6	TxV_{CC}	Transmitter power supply	
7	TD-	Transmitter data in bar	PECL
8	TD+	Transmitter data in	PECL
9	TxV_{EE}	Transmitter signal ground	

Recommended Interface Circuit

TX DC Coupling / RX DC Coupling, PECL Signal Detect

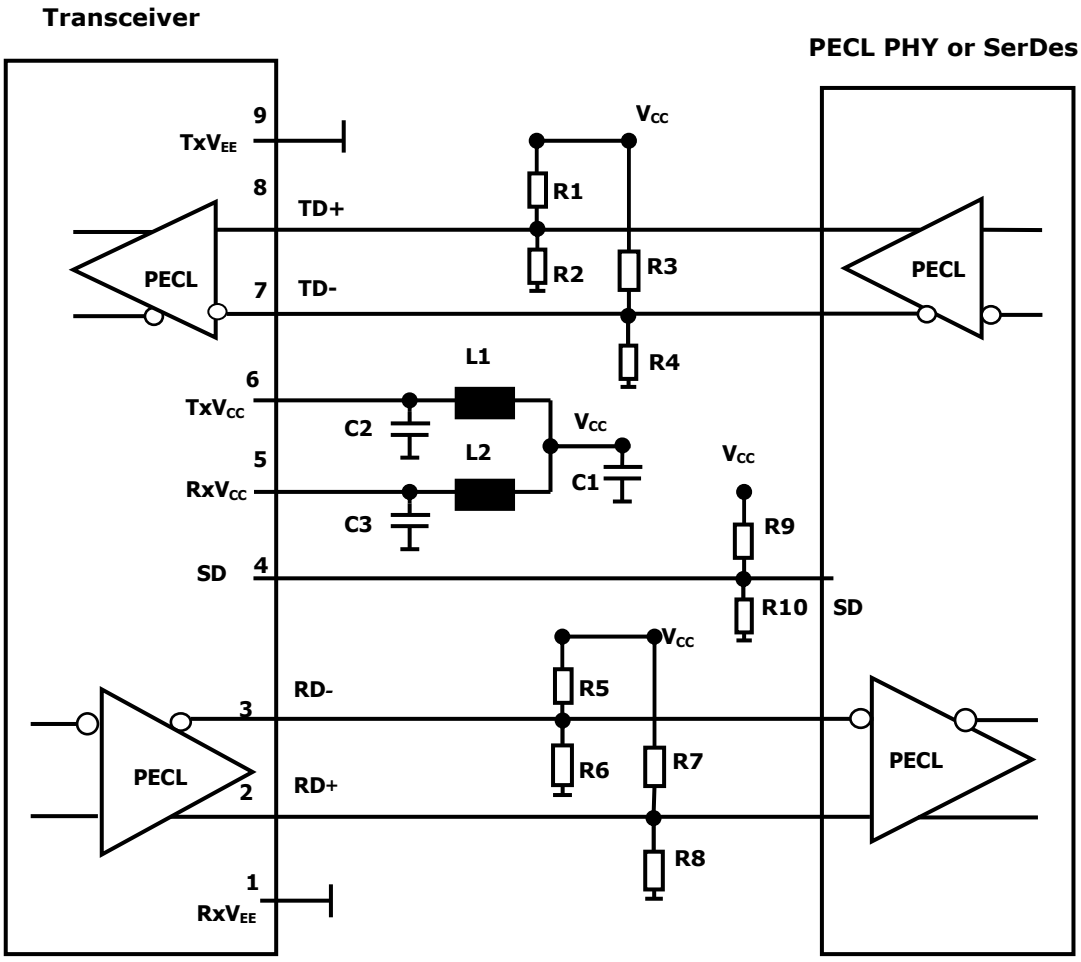

Notes:

R1/R3/R5/R7/R9=130 ohm (Depends on SerDes chip used.)

R2/R4/R6/R8/R10=82 ohm (Depends on SerDes chip used.)

C1=10uF

C2/C3=0.1uF

L1=L2=1uH

Mechanical Dimensions (Units in mm)

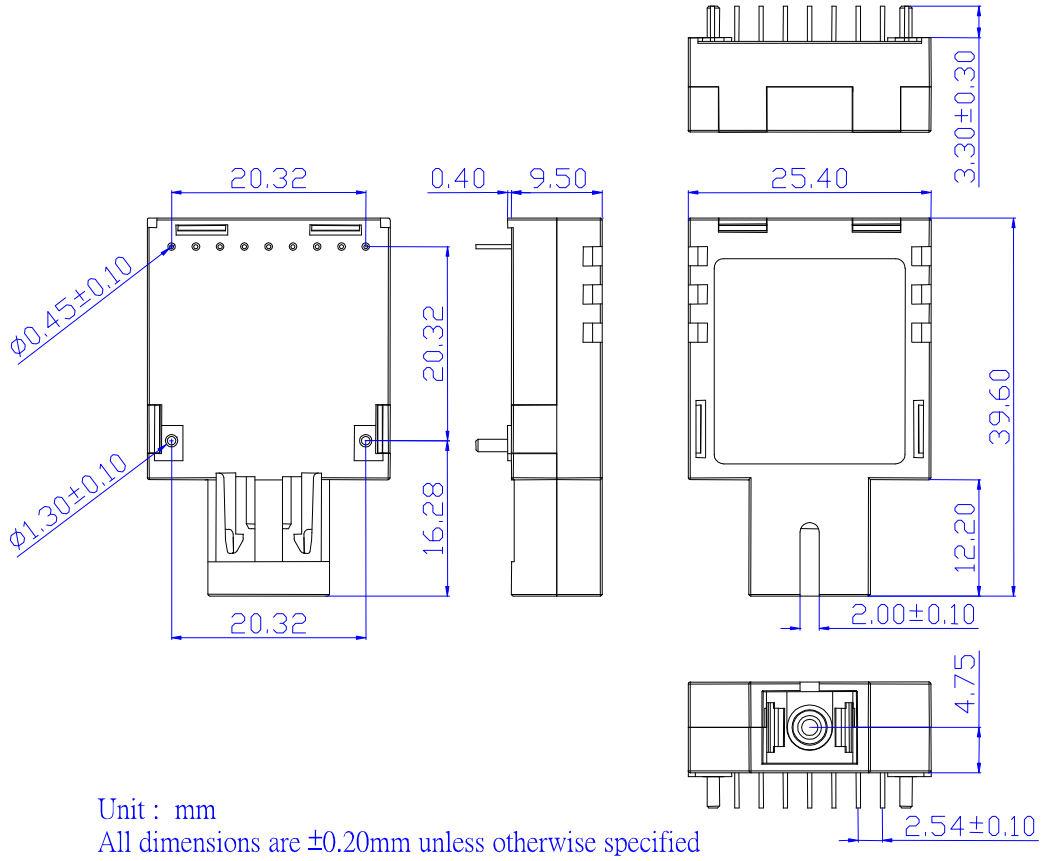

Ordering Information

AXFT–1721-01xy

Operating temperature

1: 0~70℃

3: -40~85℃

Transmission Distance

3: 10km

8: 20km

Model No.	Tx	LD	Rx	I/O	SD	Link	Temp.
AXFT-1721-0131	1550nm	FP	1310nm	DC/DC	PECL	10km	0~70℃
AXFT-1721-0133	1550nm	FP	1310nm	DC/DC	PECL	10km	-40~85℃
AXFT-1721-0181	1550nm	FP	1310nm	DC/DC	PECL	20km	0~70℃
AXFT-1721-0183	1550nm	FP	1310nm	DC/DC	PECL	20km	-40~85℃