AXGE-5853 1.25Gbps Multi-mode 850nm VCSEL, 2x5 SFF Transceiver

Product Overview

The AXGE-5853 family of Small Form Factor (SFF) transceiver module is specifically designed for the high performance integrated duplex data link over multi-mode optical fiber. These transceiver modules are compliant with the SFF Multisource Agreement (MSA).

The AXGE-5853 SFF transceivers using a short wavelength (850nm) VCSEL enable data transmission up to 550m on a multi-mode 50/125μm optical fiber and 300m on a multi-mode 62.5/125μm optical fiber

Features

- **Small Form Factor MSA compliant**
- **2x5 package style with LC receptacle**
- **1.0625Gbps Fibre Channel FC-PI 100-M5-SN-I compliant**
- **1.0625Gbps Fibre Channel FC-PI 100-M6-SN-I compliant**
- **1.25Gbps IEEE 802.3 1000BASE-SX compliant**
- **Single +3.3V power supply**
- **AC-coupled differential inputs and outputs**
- **LVTTL signal detect output**
- **Class 1 laser safety standard IEC 60825 compliant**
- **Low power dissipation**

Applications

- **1xFibre Channel**
- **Gigabit Ethernet**

Block diagram

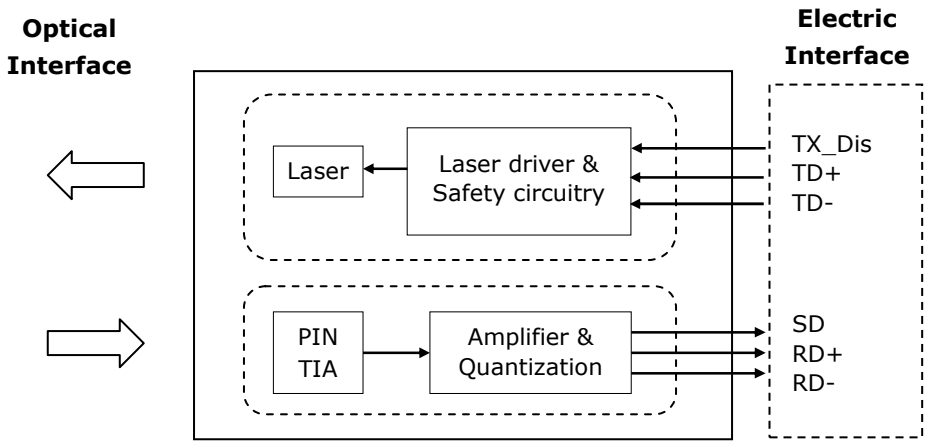

The transceiver is fundamentally consisted by two parts: transmitter and receiver. The transmitter features LVPECL differential data inputs (TD+ and TD-) and an LVTTL for TX disable control (TX_Dis). The receiver features LVPECL differential data outputs (RD+ and RD-) and LVPECL for signal detect output (SD).

Absolute Maximum Ratings

Parameter	Symbol	Min.	Max.	Unit	Note
Storage Temperature	T_S	-40	+85	℃	
Supply Voltage	TxV_{CC} RxV_{CC}	-0.5	4.0	V	
Storage Relative Humidity	RH	5	95	%	
Lead Soldering Temperature	T_{SOLD}		260	℃	
Lead Soldering Time	t_{SOLD}		10	sec	

Recommended Operating Conditions

Parameter	Symbol	Min.	Typ.	Max.	Unit	Note
Case Operating Temperature	T_{IC}	0		70	℃	Refer to ordering information
		-20		85		
		-40		85		
Supply Voltage	V_{CC}	3.1	3.3	3.5	V	
Supply Current	I_{TX} +I_{RX}		150	300	mA	

Transmitter Electro-Optical Interface

Parameter	Symbol	Min.	Typ.	Max.	Unit	Note
Data Input Voltage – Low	V_L-V_{CC}	-1.81		-1.475	V	
Data Input Voltage - High	V_H-V_{CC}	-1.165		-0.880	V	
Tx_Disable - High	$V_{Disable_H}$	2		$V_{CC}T$	V	
Tx_Disable - Low	$V_{Disable_L}$	$V_{EE}T$		$V_{EE}T$+0.8	V	
Tx_Disable Assert Time	T_{ASSERT}			10	μs	
Tx_Disable Deassert Time	$T_{DEASSERT}$			1.0	ms	
Optical Output Power	P_O	-9.5		-4	dBm	1
Optical Extinction Ratio	E_R	9			dB	
Center Wavelength	λ_C	830	850	860	nm	
Spectral Width (RMS)	$\Delta\lambda$			0.85	nm	
Optical Rise Time	t_r			260	ps	2
Optical Fall Time	t_f			260	ps	2
Total Contributed Jitter	TJ			227	ps	

Notes:

1. Coupling into a 50/125μm multimode fiber.
2. 20% to 80% value

Receiver Electro-Optical Characteristics

Parameter	Symbol	Min.	Typ.	Max.	Unit	Note
Receiver Overload	P_{IN}MAX	-3			dBm	1
Receiver Sensitivity	P_{IN}MIN			-17	dBm	1
Operating Center Wavelength	λ_c	770		860	nm	
Signal Detect - Asserted	P_{SDA}			-17.5	dBm	
Signal Detect - Deasserted	P_{SDD}	-35			dBm	
Signal Detect - Hysteresis	P_{SDH}	0.5			dB	

Notes:

1. With BER better than or equal to 1×10^{-12}, measured in the center of the eye opening with 2^7 –1 PRBS

Pin Description

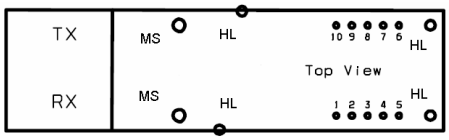

Pin No.	Pin Name	Function	Notes
MS	MS	Mounting Stubs	1
HL	HL	Housing Leads	2
1	VeeR	Receiver Signal Ground	
2	VccR	Receiver Power Supply	
3	SD	Signal Detect	3
4	RD-	Receiver Data Out Bar	4
5	RD+	Receiver Data Out	4
6	VccT	Transmitter Power Supply	
7	VeeT	Transmitter Signal Ground	
8	TX_Dis	Transmitter Disable Control	5
9	TD+	Transmitter Data In	6
10	TD-	Transmitter Data In Bar	6

Notes:

1. The mounting stubs are provided for transceiver mechanical attachment to the circuit board. They may also provide an optional connection of the transceiver to the equipment chassis ground.
2. The optional transceiver housing leads may be provided for additional signal grounding. These additional grounds may improve signal integrity, EMC, or ESD performance.
3. Normal Operation: Logic "1" Output; Fault Condition: Logic "0" Output.
4. No internal terminations will be provided.
5. Transmitter Disabled: (VccT-1.3V)<V<VccT
   Transmitter Enabled: VeeT<V<(VeeT+0.8V) or open circuit
6. An internal 50ohm termination will be provided.

Recommended Interface Circuit

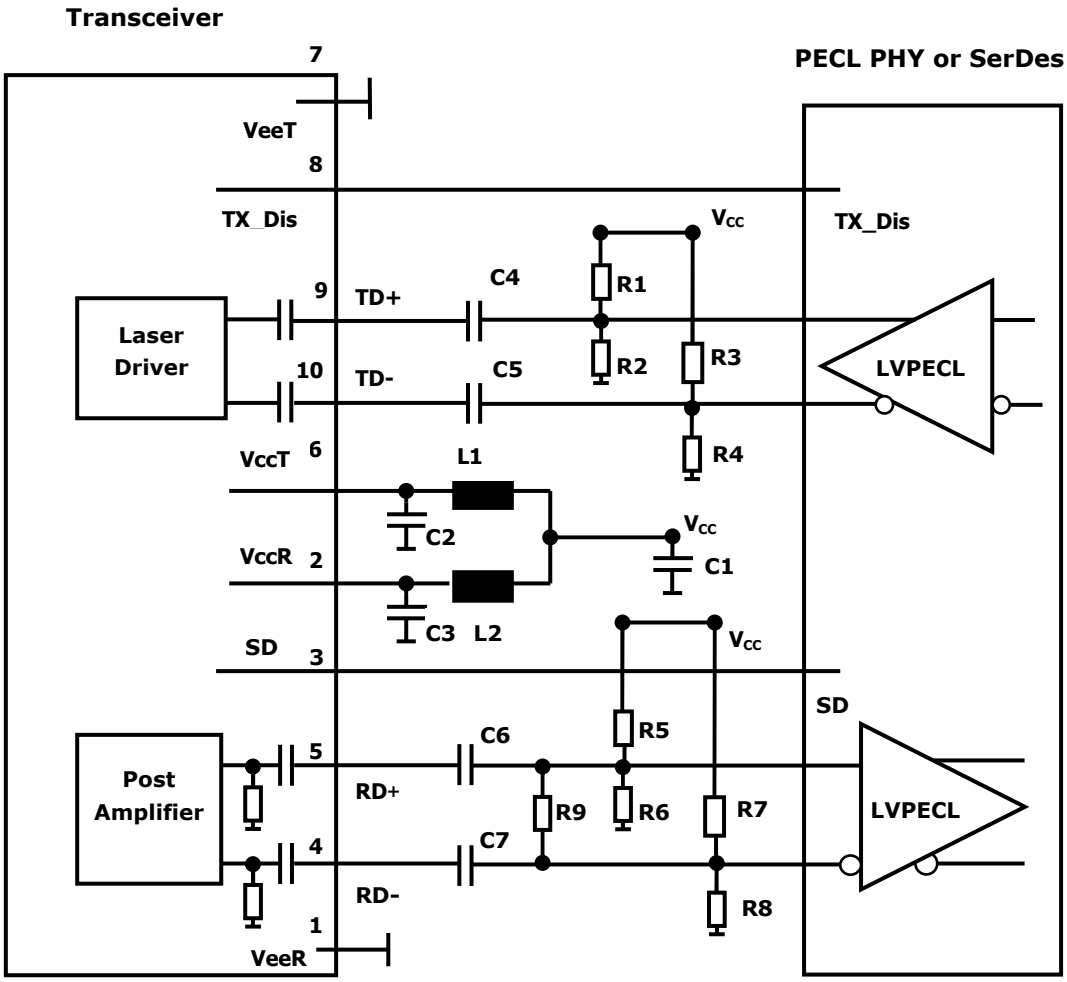

Notes:

R1/R3/R5/R7=130 ohm (Depends on SerDes chip used.)

R2/R4/R6/R8=82 ohm (Depends on SerDes chip used.)

R9 =100 ohm (Depends on SerDes chip used.)

C1=10uF

C2=C3=C4=C5=C6=C7=0.1uF

L1=L2=1uH

Mechanical Dimensions (Units in mm)

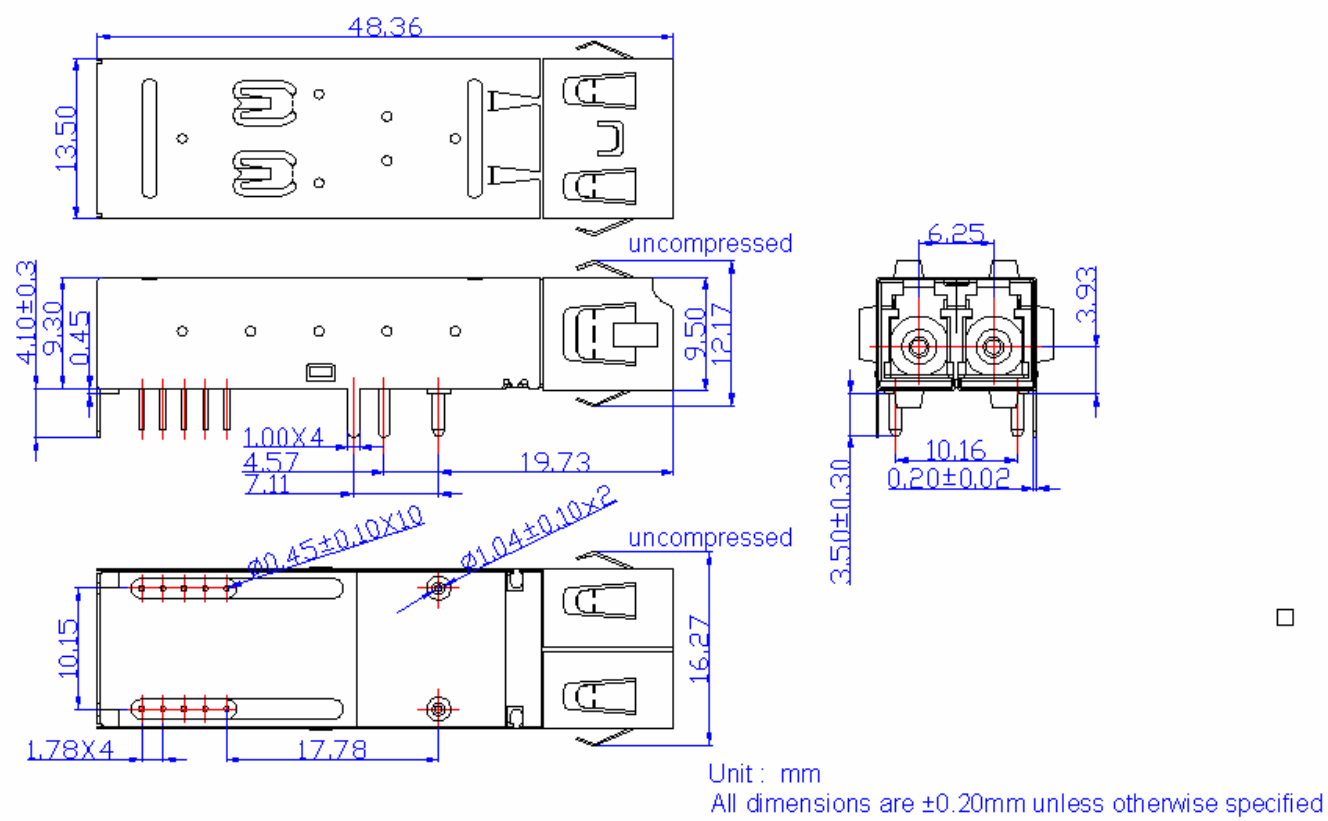

Ordering Information

AXGE–5853-051x

Operating temperature

1: 0~70℃

2: -20~85℃

3: -40~85℃

Model No.	Wavelength	LD	I/O	SD	Link	Temp.
AXGE-5853-0511	850nm	VCSEL	AC/AC	TTL	550m	0~70℃
AXGE-5853-0512	850nm	VCSEL	AC/AC	TTL	550m	-20~85℃
AXGE-5853-0513	850nm	VCSEL	AC/AC	TTL	550m	-40~85℃