AXFE-1313 125Mbps~155Mbps Multimode 1310nm, 2x5 SFF Transceiver

Product Overview

The AXFE-1313 family of Small Form Factor (SFF) transceiver module is specifically designed for the high performance integrated duplex data link over multimode optical fiber. These transceiver modules are compliant with the SFF Multisource Agreement (MSA). These modules are designed to provide 100Base-FX compliant in Fast Ethernet applications.

The AXFE-1313 transceivers using a long wavelength (1310nm) light source enable data transmission up to 2km on a multimode optical fiber.

Features

- **Small Form Factor MSA compliant**
- **125Mbps IEEE802.3u 100BASE-FX compliant**
- **125Mbps FDDI ISO/IEC 9314-1 compliant**
- **2x5 package style with LC receptacle**
- **Single +3.3V power supply**
- **DC-coupled differential inputs and outputs**
- **PECL signal detect output**
- **Class 1 laser safety standard IEC 60825 compliant**
- **2km link on a multimode fiber**

Applications

- **ATM switches and routers**
- **Fast Ethernet**
- **FDDI**

Block diagram

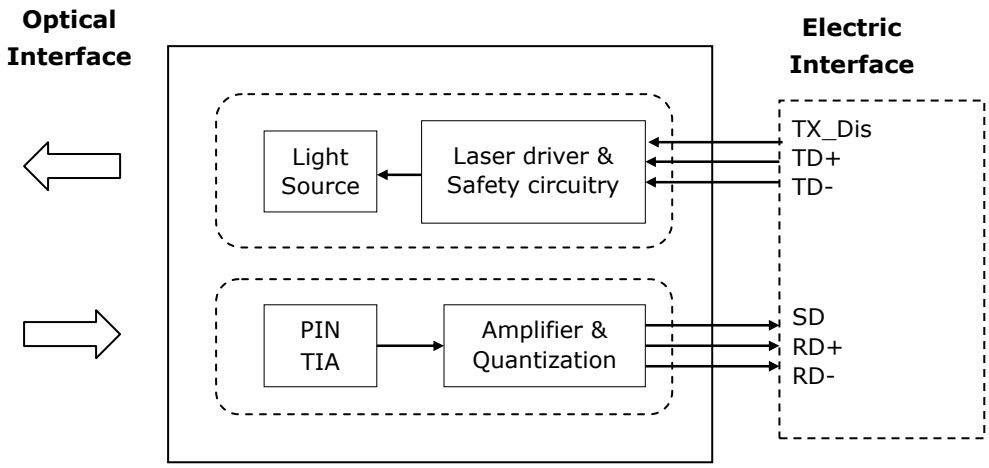

The transceiver is fundamentally consisted by two parts: transmitter and receiver. The transmitter features LVPECL differential data inputs (TD+ and TD-) and an LVTTL for TX Disable control (TX_Dis). The receiver features LVPECL differential data outputs (RD+ and RD-) and LVPECL for signal detect output (SD).

Absolute Maximum Ratings

Parameter	Symbol	Min.	Max.	Unit	Note
Storage Temperature	T_S	-40	+85	℃	
Supply Voltage	TxV_{CC} RxV_{CC}	-0.5	+4.0	V	
Storage Relative Humidity	RH	5	95	%	
Soldering Temperature / Time	T_{SOLD} / t_{SOLD}		260/10	℃/sec	

Recommended Operating Conditions

Parameter	Symbol	Min.	Typ.	Max.	Unit	Note
Case Operating Temperature	T_C	0		70	℃	Refer to ordering information
		-40		+85		
Supply Voltage	V_{CC}–V_{EE}	3.1	3.3	3.5	V	
Supply Current	I_{TX} +I_{RX}		150	250	mA	

Transmitter Electro-Optical Interface

Parameter	Symbol	Min.	Typ.	Max.	Unit	Note
Transmitter Differential Input Voltage	TD+/-	400		2400	mVp-p	
Tx_Disable - High	$V_{Disable_H}$	2		$V_{CC}T$	V	
Tx_Disable - Low	$V_{Disable_L}$	V_{EE}		$V_{EE}T+0.8$	V	
Tx_Disable Assert Time	T_{ASSERT}			10	μs	
Tx_Disable Deassert Time	$T_{DEASSERT}$			1.0	ms	
Optical Output Power	P_o	-20		-14	dBm	1
		-23.5		-14		2
Optical Extinction Ratio	E_R	10			dB	
Center Wavelength	λ_C	1270		1380	nm	
Spectral Width (RMS)	$\Delta\lambda$			7.7	nm	
Optical Rise Time	t_r			3.0	ns	3
Optical Fall Time	t_f			3.0	ns	3

Notes:

1. Coupling into a 62.5/125μm, NA=0.275 fiber
2. Coupling into a 50/125μm, NA=0.20 fiber
3. 10% to 90% value

Receiver Electro-Optical Interface

Parameter	Symbol	Min.	Typ.	Max.	Unit	Note
Receiver Differential Output Voltage	RD+/-	400		2000	mVp-p	
Receiver Overload	$P_{IN}MAX$	-8			dBm	1
Receiver Sensitivity	$P_{IN}MIN$			-32	dBm	1
Operating Center Wavelength	λ_c	1260		1620	nm	
Signal Detect - Asserted	P_{SDA}			-32	dBm	
Signal Detect - Deasserted	P_{SDD}	-45			dBm	
Signal Detect - Hysteresis	P_{SDH}	0.5			dB	

Notes:

1. With BER better than or equal to 1×10^{-12}, measured in the center of the eye opening with 2^7-1 PRBS

Pin Description

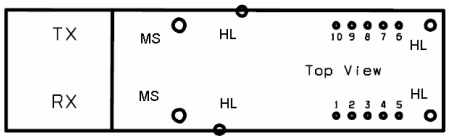

Pin No.	Pin Name	Function	Notes
MS	MS	Mounting Stubs	1
HL	HL	Housing Leads	2
1	$V_{EE}R$	Receiver Signal Ground	
2	$V_{CC}R$	Receiver Power Supply	
3	SD	Signal Detect	3
4	RD-	Receiver Data Out Bar	4
5	RD+	Receiver Data Out	4
6	$V_{CC}T$	Transmitter Power Supply	
7	$V_{EE}T$	Transmitter Signal Ground	
8	TX_Dis	Transmitter Disable Control	5
9	TD+	Transmitter Data In	6
10	TD-	Transmitter Data In Bar	6

Notes:

1. The mounting stubs are provided for transceiver mechanical attachment to the circuit board. They may also provide an optional connection of the transceiver to the equipment chassis ground.
2. The optional transceiver housing leads may be provided for additional signal grounding. These additional grounds may improve signal integrity, EMC, or ESD performance.
3. Normal Operation: Logic "1" Output; Fault Condition: Logic "0" Output.
4. No internal terminations will be provided.
5. Transmitter Disabled: $(V_{CC}T-1.3V)<V<V_{CC}T$
   Transmitter Enabled: $V_{EE}T<V<(V_{EE}T+0.8V)$ or open circuit
6. An internal 50ohm termination will be provided.

Recommended Interface Circuit

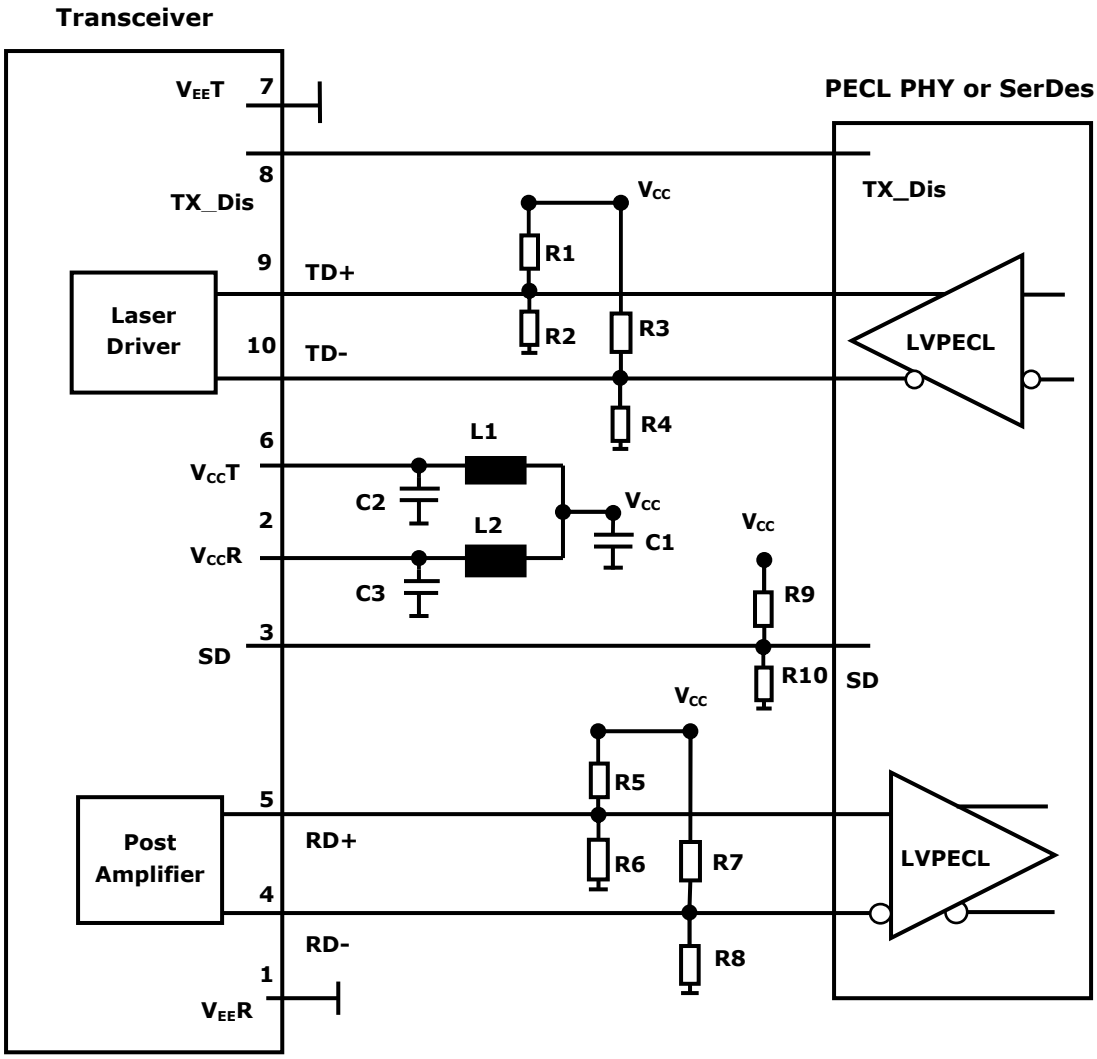

Notes:

R1/R3/R5/R7/R9=130 ohm (Depends on SerDes chip used.)

R2/R4/R6/R8/R10=82 ohm (Depends on SerDes chip used.)

C1=10uF

C2=C3=0.1uF

L1=L2=1uH

Mechanical Dimensions (Units in mm)

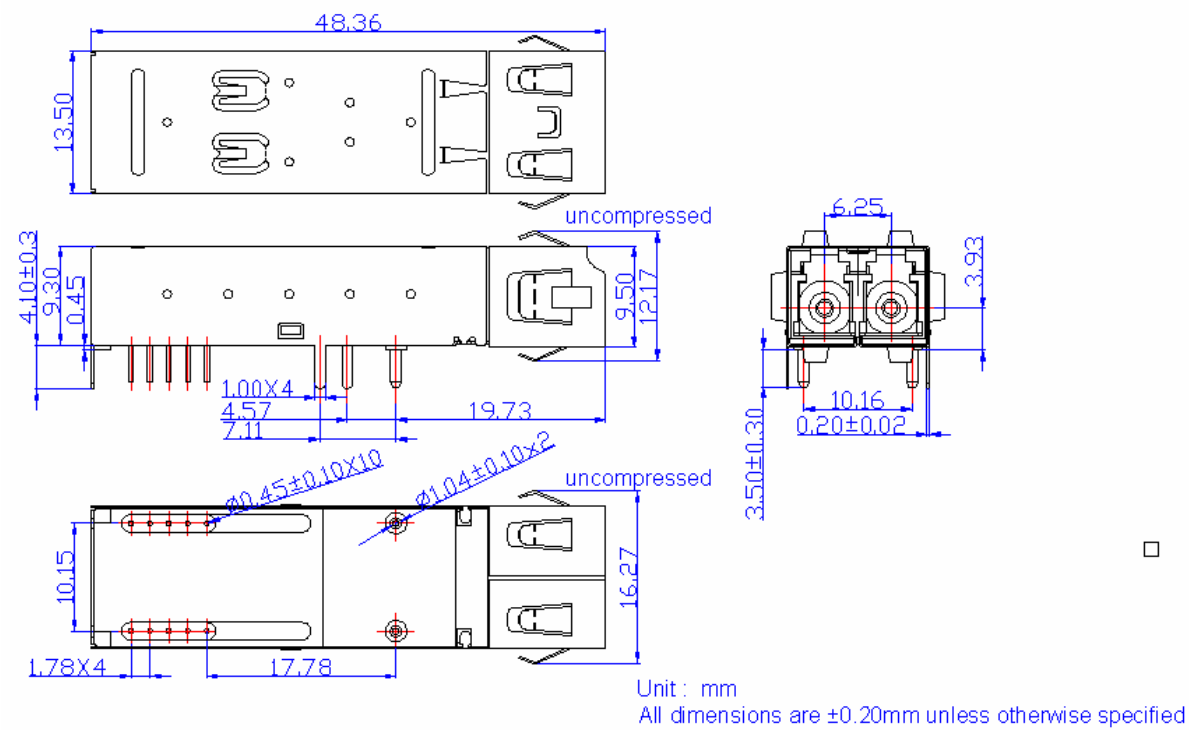

Ordering Information

AXFE-1313-112x

Operating Temperature

1: 0~70℃

3: -40~85℃

Model No.	Wavelength	LD	I/O	SD	Link	Temp.
AXFE-1313-1121	1310nm	FP	DC/DC	PECL	2km	0~70℃
AXFE-1313-1123	1310nm	FP	DC/DC	PECL	2km	-40~85℃