# AXGE-1353 1.25Gbps Single Mode 1310nm FP, 2x5 SFF Transceiver

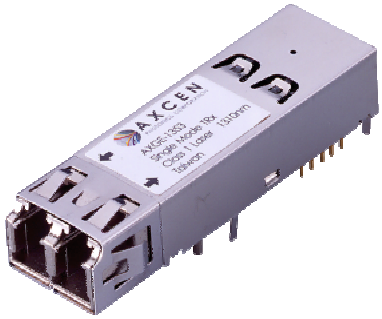

## Product Overview

AXGE-1353 transceiver modules are high performance, cost effective modules for serial optical data communications applications operating at 1.25Gbps. The 1310nm high-speed InGaAsP FP-LD and InGaAs PIN photodiode are provided as a light source and a detector, respectively. These modules are designed for low cost LAN, WAN, Fibre Channel and Gigabit Ethernet applications.

## Features

- **Small Form Factor MSA compliant**
- **1.0625Gbps Fibre Channel FC-PI 100-SM-LC-L compliant**
- **1.25Gbps IEEE 802.3 1000BASE-LX compliant**
- **2x5 package style with LC receptacle**
- **Class 1 laser safety compliant**
- **Single +3.3V power supply operation**
- **Operating temperature range 0℃~ +70℃**
- **AC coupled LVPECL level inputs/outputs**
- **LVTTL signal detect output**

## Applications

- **1xFibre Channel**
- **Gigabit Ethernet**

AXCEN PHOTONICS CORPORATION

## Absolute Maximum Ratings

| Parameter | Symbol | Min. | Typ. | Max. | Unit | Note |
|---|---|---|---|---|---|---|
| Storage Case Temperature | $T_S$ | -40 | | +85 | ℃ | |
| Supply Voltage | $V_{CC}$ - $V_{EE}$ | 0 | | 3.6 | V | |
| Output Current | $I_O$ | | | 300 | mA | |
| Wave Soldering and Aqueous Wash | $T_{SOLD}/t_{SOLD}$ | | | +260 / 10 | ℃ / sec | |

## Recommended Operating Conditions

| Parameter | Symbol | Min. | Typ. | Max. | Unit | Note |
|---|---|---|---|---|---|---|
| Case Operating Temperature | $T_C$ | 0 | | +70 | ℃ | |
| Supply Voltage | $V_{CC}$ - $V_{EE}$ | 3.1 | | 3.5 | V | |
| Data Output Load | $R_{OL}$ | | 50 | | Ω | |
| Transmit Disable Input Voltage - Low | $T_{DIS}$ | | | 0.6 | V | |
| Transmit Disable Input Voltage – High | $T_{DIS}$ | 2.2 | | | V | |
| Transmit Disable Assert Time | $T_{ASSERT}$ | | | 10 | μs | |
| Transmit Disable Deassert Time | $T_{DEASSERT}$ | | | 1.0 | ms | |

## Transmitter Electro-Optical Characteristics ($T_C$ = 0℃ to +70℃)

| Parameter | Symbol | Min. | Typ. | Max. | Unit | Note |
|---|---|---|---|---|---|---|
| Output optical power 9μm SMF | $P_o$ | -9.5 | | -3 | dBm | |
| Center Wavelength | $\lambda_C$ | 1278 | 1310 | 1343 | nm | |
| RMS spectrum Width | $\Delta\lambda_{RMS}$ | | | 2.8 | nm | |
| Extinction Ratio | $E_R$ | 9 | | | dB | |
| Output Optical Eye | Eye Mask Defined in IEEE 802.3z standard compliant | | | | | |
| Optical Rise / Fall Time | $t_r$ / $t_f$ | | | 0.26 | ns | 1 |
| Relative Intensity Noise | RIN | | | -120 | dB/Hz | |
| Deterministic Jitter | DJ | | | 80 | ps | |
| Total Jitter | TJ | | | 227 | ps | |
| Supply Current | $I_{CCT}$ | | | 140 | mA | |
| Differential Input Voltage | $V_{IH}$-$V_{IL}$ | 0.3 | | 0.8 | V | |

**Notes:**

1. 20%-80%

## Receiver Electro-Optical Characteristics ($T_C$ = 0℃ to +70℃)

| Parameter | Symbol | Min. | Typ. | Max. | Unit | Note |
|---|---|---|---|---|---|---|
| Receiver Overload | $P_{IN}MAX$ | -3 | | | dBm | 1 |
| Receiver Sensitivity | $P_{IN}MIN$ | | | -20 | dBm | 1 |
| Operating Center Wavelength | $\lambda_{OC}$ | 1270 | | 1355 | nm | |
| Return Loss | RL | 12 | | | dB | |
| Signal Detect - Asserted | $P_A$ | | | -20 | dBm | |
| Signal Detect - Deasserted | $P_D$ | -30 | | | dBm | |
| Signal Detect - Hysteresis | $P_A$ - $P_D$ | 1.5 | | | dB | |
| Supply Current | $I_{cc}$ | | | 150 | mA | |
| Differential Output Voltage | $V_{OH}$-$V_{OL}$ | 0.5 | | 0.9 | V | 2 |
| Signal Detect Output Voltage - Low | $V_{SDL}$ | | | 0.5 | V | |
| Signal Detect Output Voltage - High | $V_{SDH}$ | 2 | | | V | |

**Notes:**

1. $2^7$-1 PRBS, BER=$10^{-12}$
2. Compatible with 10K, 10KH, and 100K ECL and PECL outputs

## Connection Diagram

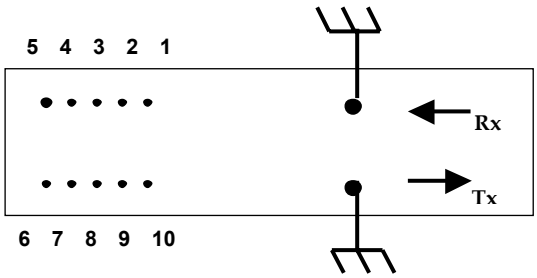


**Top View**

| Pin | Symbol | Description | Logic Family |
|---|---|---|---|
| 1 | $RxV_{EE}$ | Receiver signal ground | N/A |
| 2 | $RxV_{CC}$ | Receiver power supply | N/A |
| 3 | SD | Signal detect | LVTTL |
| 4 | RD- | Receiver data out bar | LVPECL |
| 5 | RD+ | Receiver data out | LVPECL |

| | | | |
|---|---|---|---|
| 6 | $TxV_{CC}$ | Transmitter power supply | N/A |
| 7 | $TxV_{EE}$ | Transmitter signal ground | N/A |
| 8 | TxDIS | Transmitter disable | LVTTL |
| 9 | TD+ | Transmitter data in | LVPECL |
| 10 | TD- | Transmitter data in bar | LVPECL |

## Recommended Interface Circuit

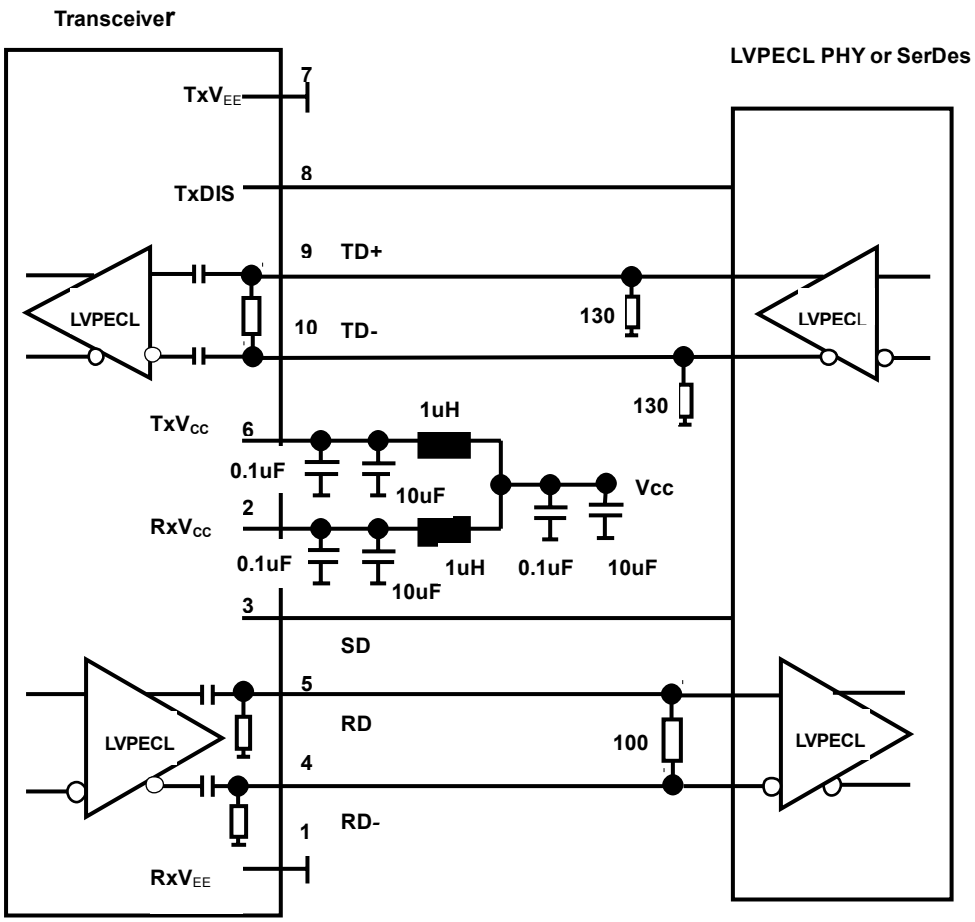

**Package Diagram (Units in mm)**

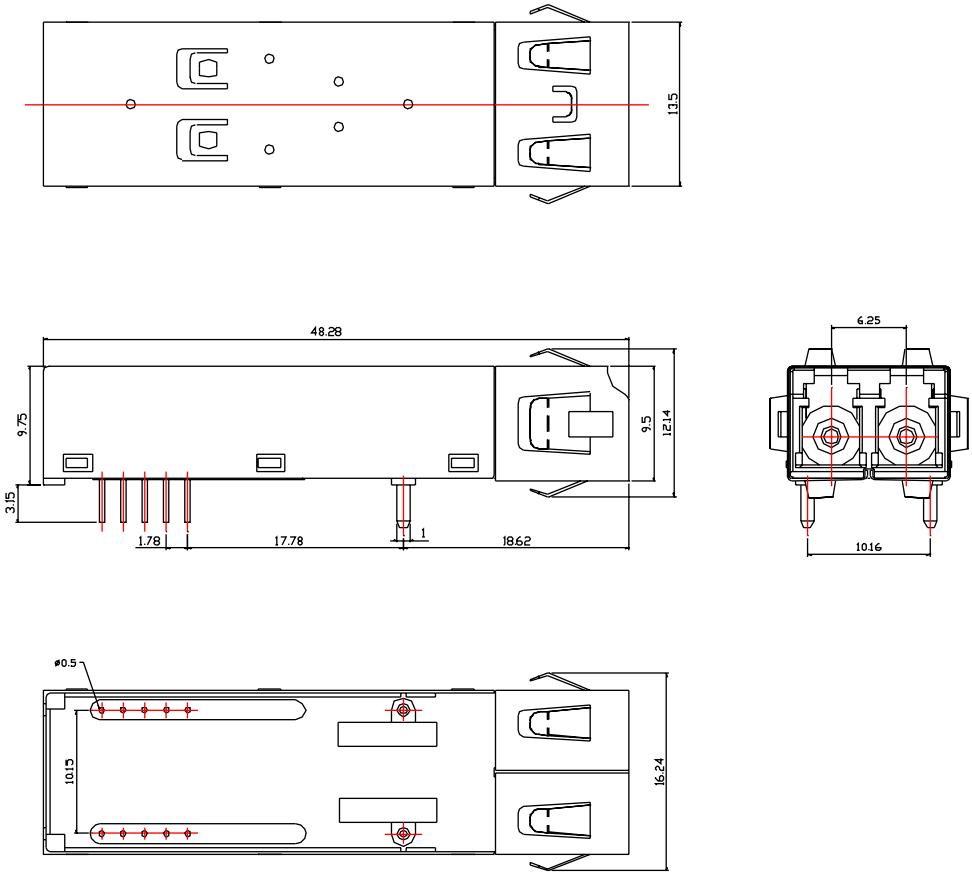


**Ordering Information**

## AXGE-1353-0531

| Product Code | Description |
|---|---|
| AXGE-1353-0531 | 2X5 SFF, 1.25Gbps, SM, 1310nm, FP LD, 0~70℃, 10km |