# AXFE-1311 125Mbps Single-mode 1310nm, 1x9 ST Transceiver

## Product Overview

The AXFE-1311 family of 1x9 ST transceiver module is specifically designed for the high performance integrated duplex data link over single-mode optical fiber. These transceiver modules are compliant with the ST Multisource Agreement (MSA). These modules are designed to provide 100Base-FX compliant in Fast Ethernet applications.

The AXFE-1311 transceivers using a long wavelength (1310nm) light source enable data transmission up to 80km on a single-mode (9/125μm) optical fiber.

## Features

- **Duplex ST receptacle**
- **125Mbps IEEE802.3ah 100BASE-LX10 compatible**
- **155Mbps ITU-T G957 STM S-1.1/L-1.1 compatible**
- **155Mbps SONET OC-3 IR-1/LR-1 compatible**
- **Single +3.3~5V power supply operation**
- **DC coupled PECL level inputs and outputs**
- **PECL signal detect output**
- **Class 1 laser safety standard IEC 60825 compliant**
- **80 km link on a single-mode fiber**
- **Low power dissipation**

## Applications

- **ATM switches and routers**
- **Fast Ethernet**
- **FDDI**

## Block diagram

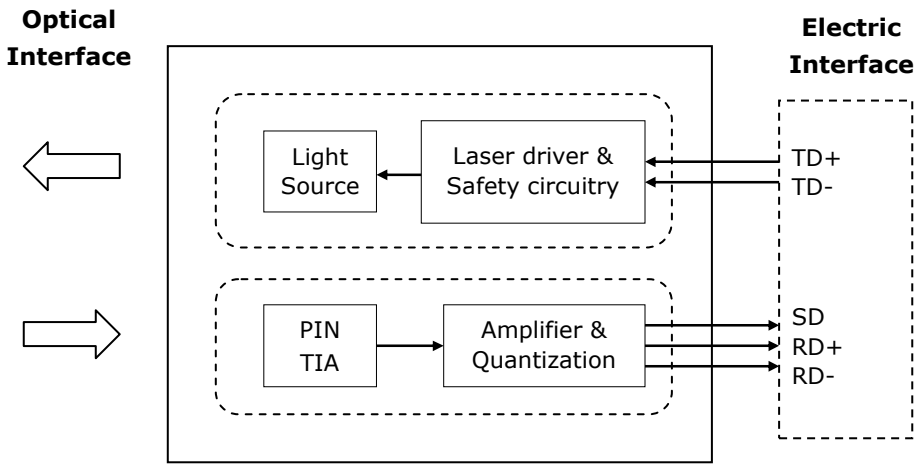


## Absolute Maximum Ratings

| Parameter | Symbol | Min. | Max. | Unit | Note |
|---|---|---|---|---|---|
| Storage Temperature | $T_S$ | -40 | +85 | ℃ | |
| Supply Voltage | $V_{CC}T$<br>$V_{CC}R$ | -0.5 | 6.0 | V | |
| Storage Relative Humidity | RH | 5 | 95 | % | |
| Lead Soldering Temperature | $T_{ls}$ | | 260 | ℃ | |
| Lead Soldering Time | $t_{ls}$ | | 10 | sec | |

## Recommended Operating Conditions

| Parameter | Symbol | Min. | Typ. | Max. | Unit | Note |
|---|---|---|---|---|---|---|
| Case Operating Temperature | $T_C$ | 0 | | 70 | ℃ | Refer to ordering information |
| | | -40 | | 85 | | |
| Supply Voltage | $V_{CC}$ | 3.1 | 3.3 | 3.5 | V | |
| | | 4.75 | 5.0 | 5.25 | | |
| Supply Current | $I_{TX}+I_{RX}$ | | 150 | 300 | mA | |

## Transmitter Electro-Optical Interface

| Parameter | Symbol | Min. | Typ. | Max. | Unit | Note |
|---|---|---|---|---|---|---|
| Data Input Voltage – Low | $V_L$-$V_{CC}$ | -1.81 | | -1.475 | V | |
| Data Input Voltage - High | $V_H$-$V_{CC}$ | -1.165 | | -0.880 | V | |
| Optical Output Power | $P_O$ | +0 | | +5 | dBm | |
| Optical Extinction Ratio | $E_R$ | 10 | | | dB | |
| Center Wavelength | $\lambda_C$ | 1270 | | 1355 | nm | |
| Spectral Width (RMS) | $\Delta\lambda$ | | | 2.5 | nm | |
| Optical Rise Time | $t_r$ | | | 2.0 | ns | 1 |
| Optical Fall Time | $t_f$ | | | 2.0 | ns | 1 |
| Duty Cycle Distortion | DCD | | | 1.0 | ns | |
| Random Jitter | RJ | | | 0.76 | ns | |

**Notes:**

1. 10% to 90% value

## Receiver Electro-Optical Characteristics

| Parameter | Symbol | Min. | Typ. | Max. | Unit | Note |
|---|---|---|---|---|---|---|
| Receiver Overload | $P_{IN}$MAX | +0 | | | dBm | 1 |
| Receiver Sensitivity | $P_{IN}$MIN | | | -35 | dBm | 1 |
| Operating Center Wavelength | $\lambda_c$ | 1260 | | 1620 | nm | |
| Signal Detect - Asserted | $P_{SDA}$ | | | -35 | dBm | |
| Signal Detect - Deasserted | $P_{SDD}$ | -45 | | | dBm | |
| Signal Detect - Hysteresis | $P_{SDH}$ | 0.5 | | | dB | |
| Receiver Output Voltage - Low | $V_{OL}$-$V_{CC}$ | -2 | | -1.58 | V | |
| Receiver Output Voltage - High | $V_{OH}$-$V_{CC}$ | -1.1 | | -0.74 | V | |

**Notes:**

1. With BER better than or equal to $1\times10^{-12}$, measured in the center of the eye opening with $2^7$ –1 PRBS

## Pin Description

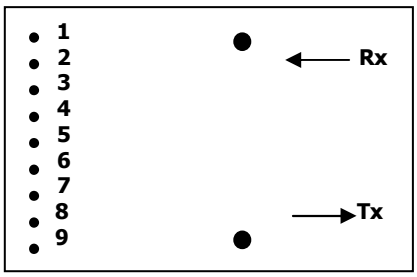


**Top View**

| Pin No | Pin Name | Function | Notes |
|---|---|---|---|
| 1 | $RxV_{EE}$ | Receiver signal ground | |
| 2 | RD+ | Receiver data out | |
| 3 | RD- | Receiver data out bar | |
| 4 | SD | Signal detect | |
| 5 | $RxV_{CC}$ | Receiver power supply | |
| 6 | $TxV_{CC}$ | Transmitter power supply | |
| 7 | TD- | Transmitter data in bar | |
| 8 | TD+ | Transmitter data in | |
| 9 | $TxV_{EE}$ | Transmitter signal ground | |

**Recommended Interface Circuit**

**TX DC Coupling / RX DC Coupling, PECL Signal Detect**

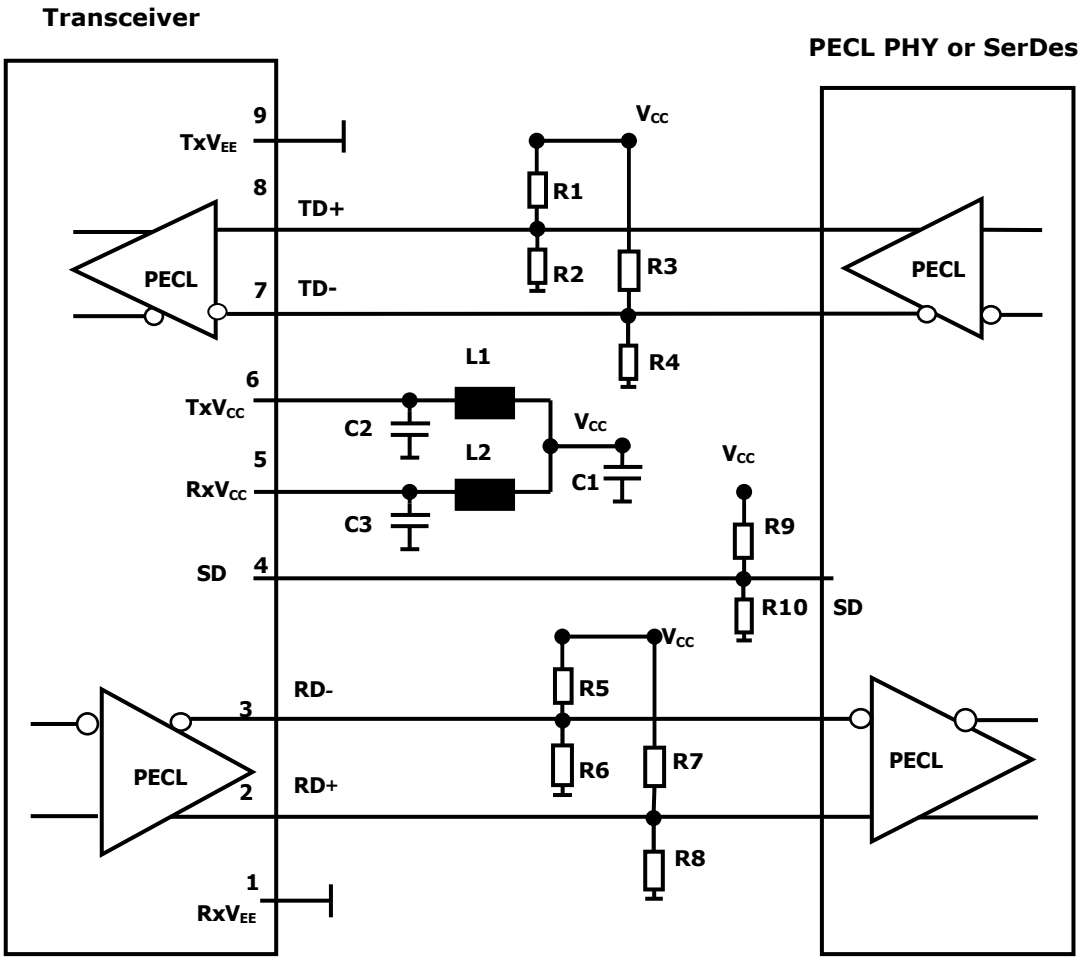


**Notes:**

**R1/R3/R5/R7/R9=130 ohm @3.3V (Depends on SerDes chip used.)**

**=82 ohm @5V (Depends on SerDes chip used.)**

**R2/R4/R6/R8/R10=82 ohm @3.3V (Depends on SerDes chip used.)**

**=130 ohm @5V (Depends on SerDes chip used.)**

**C1=10uF**

**C2/C3=0.1uF**

**L1=L2=1uH**

**Mechanical Dimensions (Units in mm)**

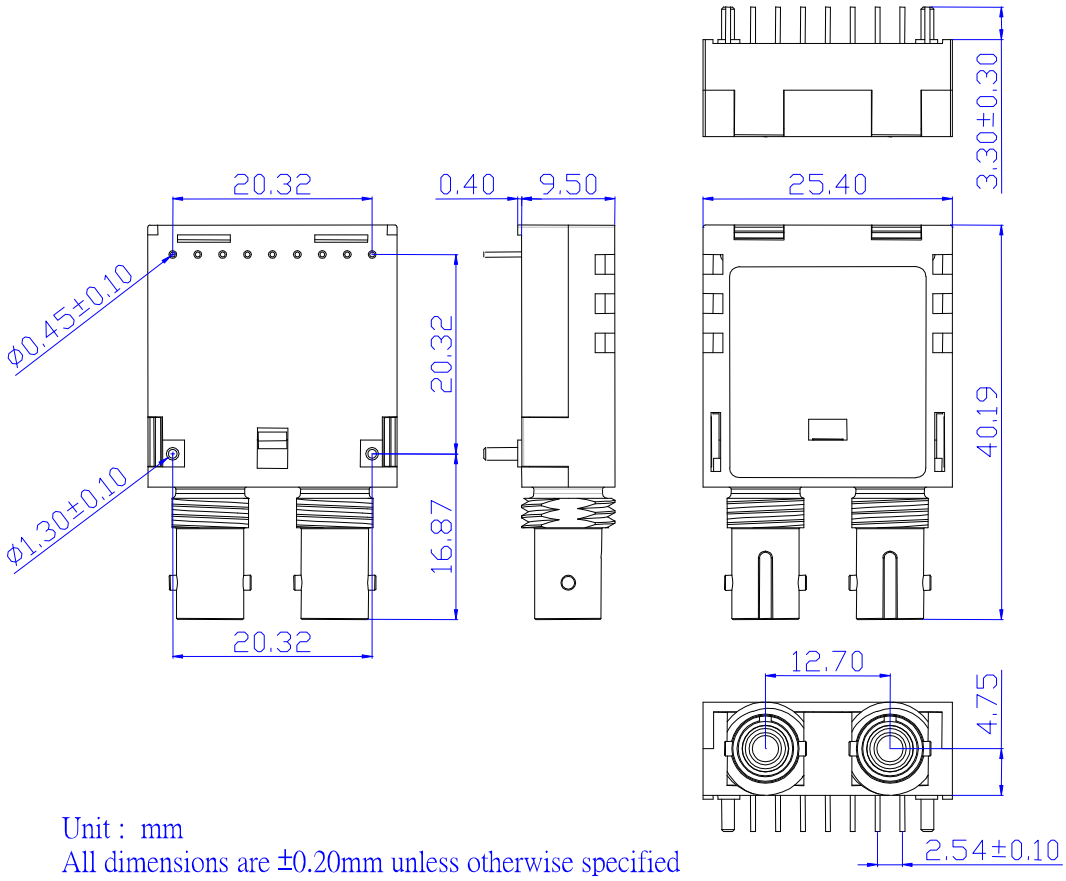

**Ordering Information**

**AXFE–1311-0KCx**

**Operating Temperature**

6: 0~ 70℃

7: -40~ 85℃

| Model No. | Wavelength | LD | I/O | SD | Link | Temp. |
|---|---|---|---|---|---|---|
| AXFE-1311-0KC6 | 1310nm | FP | DC/DC | PECL | 80km | 0~70℃ |
| AXFE-1311-0KC7 | 1310nm | FP | DC/DC | PECL | 80km | -40~85℃ |

**NOTE:**

Distances are indicative only. Attenuation of 0.40 dB/km is used for the link length calculations. To calculate a more precise link budget based on specific conditions in your application, please refer to the Optical Specifications in Page#3.