# AXGE-3551 1.25Gbps Single-mode 1550nm, 1x9 DSC Transceiver

## Product Overview

The AXGE-3551 family of 1x9 DSC transceiver modules is specifically designed for the high performance integrated duplex data link over single-mode optical fiber. These transceiver modules are compliant with the DSC Multisource Agreement (MSA). These modules are designed to provide 1000Base-ZX compliant in Gigabit Ethernet applications.

The AXGE-3551 transceivers using a long wavelength (1550nm) DFB laser diode enable data transmission up to 80km on a single-mode (9/125μm) optical fiber.

## Features

- **Low Profile (9.8mm maximum) plastic molded package**
- **Single 3.3 power supply operation**
- **DC or AC coupling PECL level inputs and outputs**
- **PECL or TTL signal detect output**
- **Class 1 laser safety standard IEC 60825 compliant**
- **80km link on a single-mode fiber**
- **Low power dissipation**

## Applications

- **1xFibre Channel**
- **Gigabit Ethernet**
- **High speed I/O for file server**

## Block diagram

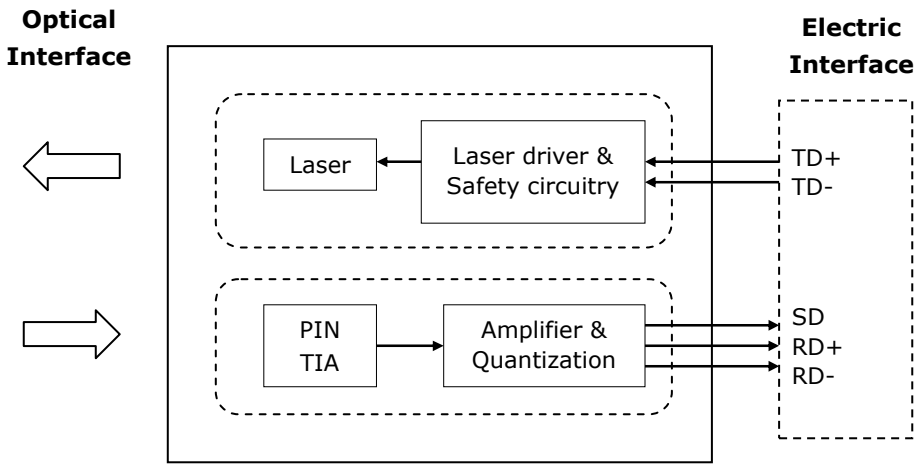


## Absolute Maximum Ratings

| Parameter | Symbol | Min. | Max. | Unit | Note |
|---|---|---|---|---|---|
| Storage Temperature | $T_S$ | -40 | +85 | ℃ | |
| Supply Voltage | $V_{CC}T$<br>$V_{CC}R$ | -0.5 | 4.0 | V | |
| Storage Relative Humidity | RH | 5 | 95 | % | |
| Lead Soldering Temperature | $T_{ls}$ | | 260 | ℃ | |
| Lead Soldering Time | $t_{ls}$ | | 10 | sec | |

## Recommended Operating Conditions

| Parameter | Symbol | Min. | Typ. | Max. | Unit | Note |
|---|---|---|---|---|---|---|
| Case Operating Temperature | $T_C$ | 0 | | 70 | ℃ | Refer to ordering information |
| | | -40 | | 85 | | |
| Supply Voltage | $V_{CC}$ | 3.1 | 3.3 | 3.5 | V | |
| Supply Current | $I_{TX}+I_{RX}$ | | 150 | 300 | mA | |

## Transmitter Electro-Optical Interface

| Parameter | Symbol | Min. | Typ. | Max. | Unit | Note |
|---|---|---|---|---|---|---|
| Data Input Voltage – Low | $V_L$-$V_{CC}$ | -1.81 | | -1.475 | V | |
| Data Input Voltage - High | $V_H$-$V_{CC}$ | -1.165 | | -0.880 | V | |
| Optical Output Power | $P_O$ | 0 | | 5 | dBm | 1 |
| Optical Extinction Ratio | $E_R$ | 9 | | | dB | |
| Center Wavelength | $\lambda_C$ | 1520 | 1550 | 1580 | nm | |
| Spectral Width (-20dB) | $\Delta\lambda$ | | | 1 | nm | |
| Side Mode Suppression Ratio | SMSR | 30 | | | dB | |
| Optical Rise / Fall Time | $t_r$ / $t_f$ | | | 260 | ps | 2 |
| Relative Intensity Noise | RIN | | | -120 | dB/Hz | |
| Total Contributed Jitter | TJ | | | 227 | ps | |

**Notes:**

1. Coupling into a 9/125μm single-mode fiber.
2. 20% to 80% value

## Receiver Electro-Optical Characteristics

| Parameter | Symbol | Min. | Typ. | Max. | Unit | Note |
|---|---|---|---|---|---|---|
| Receiver Overload | $P_{IN}$MAX | -1 | | | dBm | 1 |
| Receiver Sensitivity | $P_{IN}$MIN | | | -24 | dBm | 1 |
| Operating Center Wavelength | $\lambda_c$ | 1260 | | 1620 | nm | |
| Receiver Signal Detect – High | $P_{RX_SDA}$ | | | -24 | dBm | |
| Receiver Signal Detect – Low | $P_{RX_SDD}$ | -35 | | | dBm | |
| Receiver Signal Detect - Hysteresis | $P_{RX_SDH}$ | 0.5 | | | dB | |

**Notes:**

1. With BER better than or equal to $1\times10^{-12}$, measured in the center of the eye opening with $2^7$ –1 PRBS

## Pin Description

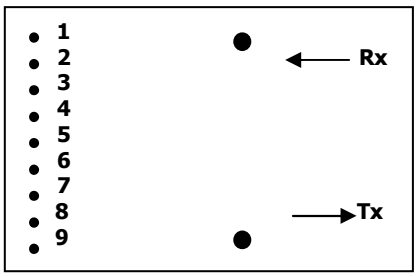


**Top View**

| Pin No | Pin Name | Function | Notes |
|---|---|---|---|
| 1 | $RxV_{EE}$ | Receiver signal ground | |
| 2 | RD+ | Receiver data out | |
| 3 | RD- | Receiver data out bar | |
| 4 | SD | Signal detect | |
| 5 | $RxV_{CC}$ | Receiver power supply | |
| 6 | $TxV_{CC}$ | Transmitter power supply | |
| 7 | TD- | Transmitter data in bar | |
| 8 | TD+ | Transmitter data in | |
| 9 | $TxV_{EE}$ | Transmitter signal ground | |

**Recommended Interface Circuit**

**TX DC Coupling / RX DC Coupling, PECL Signal Detect**

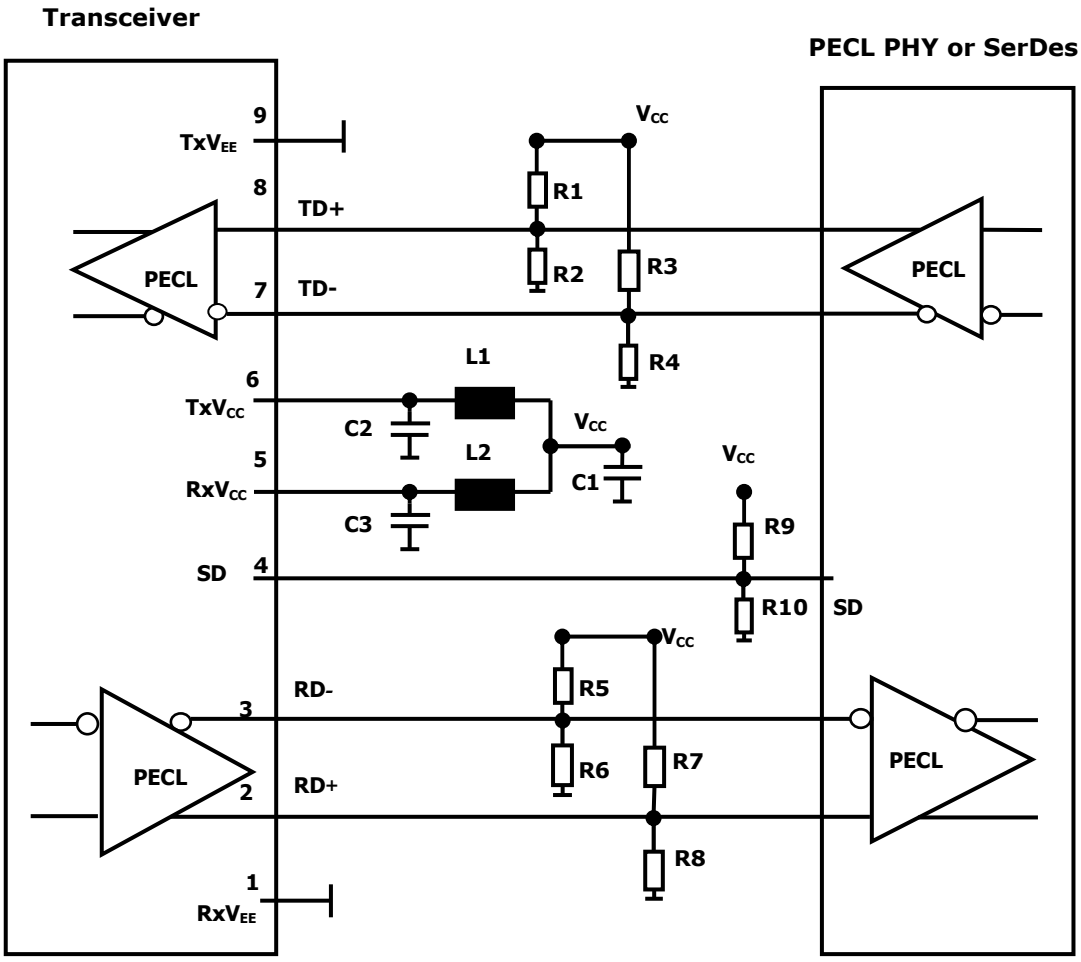


**Notes:**

**R1/R3/R5/R7/R9=130 ohm @3.3V (Depends on SerDes chip used.)**

**=82 ohm @5V (Depends on SerDes chip used.)**

**R2/R4/R6/R8/R10=82 ohm @3.3V (Depends on SerDes chip used.)**

**=130 ohm @5V (Depends on SerDes chip used.)**

**C1=10uF**

**C2/C3=0.1uF**

**L1=L2=1uH**

## TX AC Coupling / RX AC Coupling, TTL Signal Detect

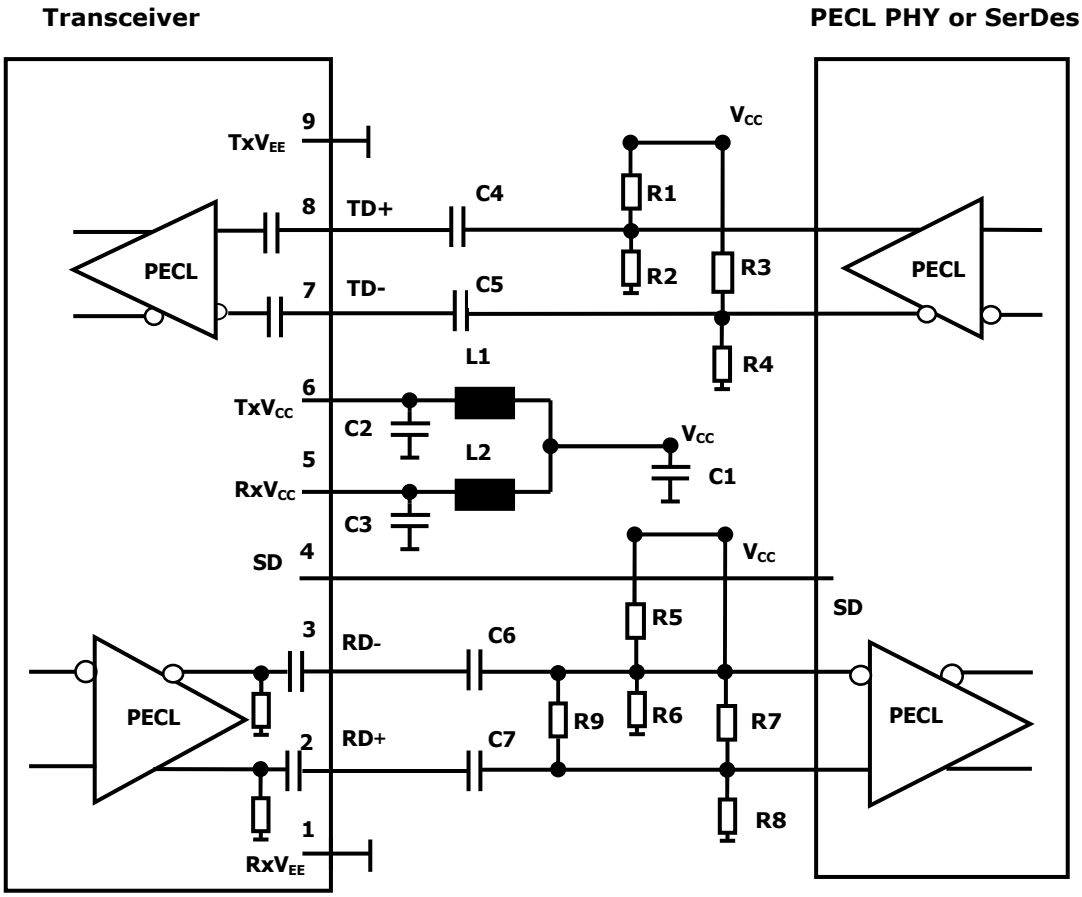


**Notes:**

**R1/R3/R5/R7/R9=130 ohm @3.3V (Depends on SerDes chip used.)**

**=82 ohm @5V (Depends on SerDes chip used.)**

**R2/R4/R6/R8/R10=82 ohm @3.3V (Depends on SerDes chip used.**

**=130 ohm@5V (Depends on SerDes chip used.)**

**R9 =100 ohm (Depends on SerDes chip used.**

**C1=10uF**

**C2/C3/C4/C5/C6/C7=0.1uF**

**L1=L2=1uH**

**Mechanical Dimensions (Units in mm)**

**No Clipper**

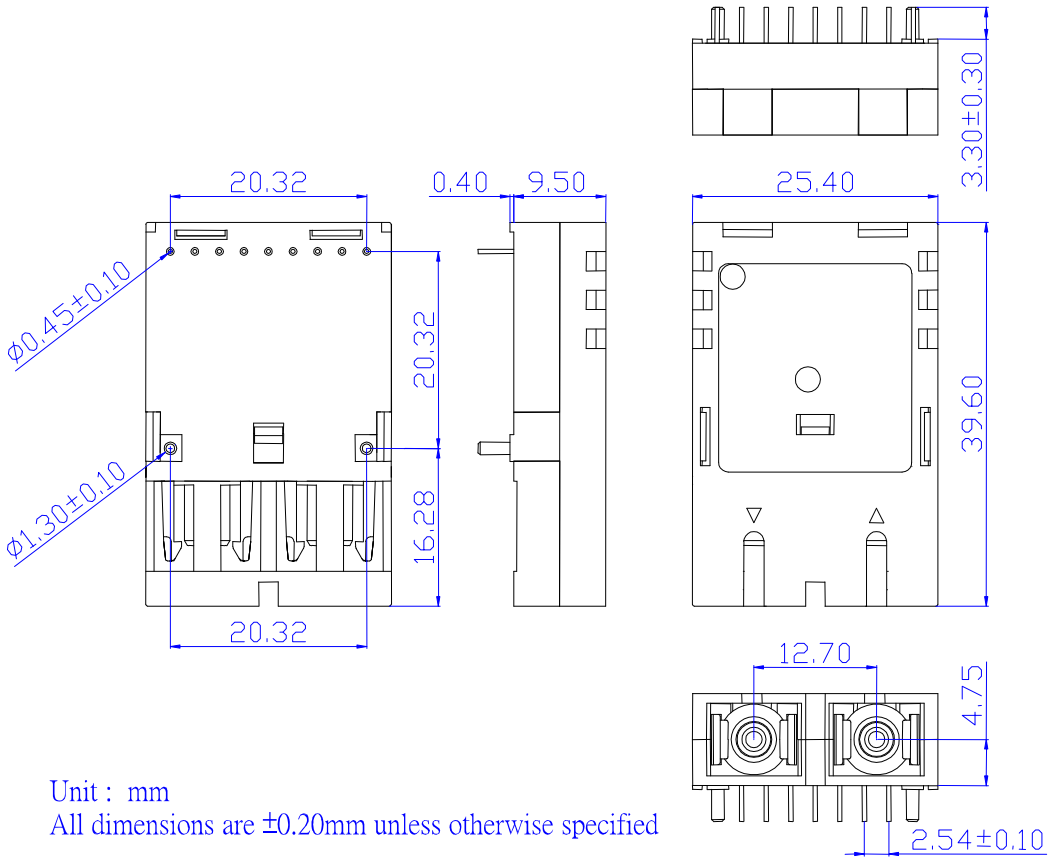

**Mechanical Dimensions (Units in mm)**

**Backward Clipper**

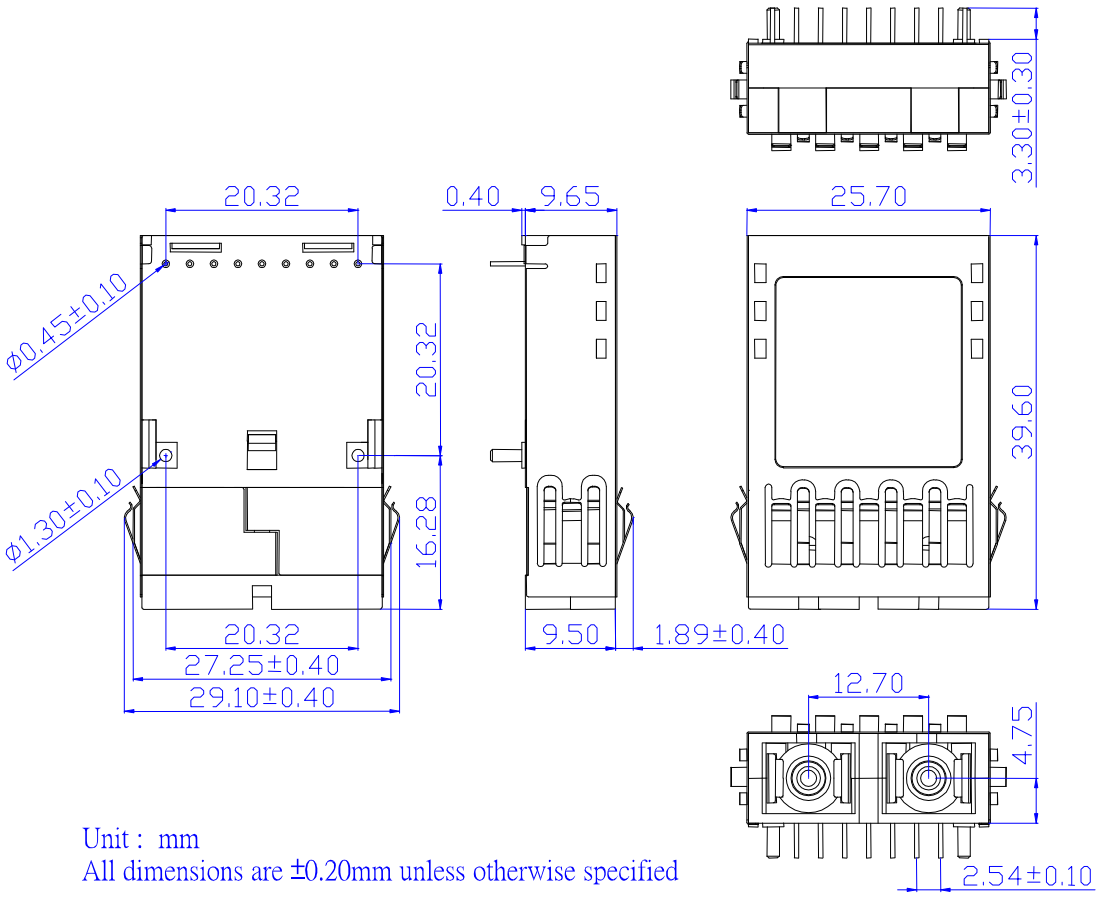

## Ordering Information

**AXGE–3551-xyCz**

**Operating temperature**

1: 0~70℃

3: -40~85℃

**I/O Interface**

1: TX DC coupling / RX DC coupling, PECL Signal Detect

5: TX AC coupling / RX AC coupling, TTL Signal Detect

**Case**

0: No Clipper

1: Backward Clipper

| Model No. | Wavelength | LD | Case | I/O | SD | Link | Temp. |
|---|---|---|---|---|---|---|---|
| AXGE-3551-01C1 | 1550nm | DFB | No Clipper | DC/DC | PECL | 80km | 0~70℃ |
| AXGE-3551-01C3 | 1550nm | DFB | No Clipper | DC/DC | PECL | 80km | -40~85℃ |
| AXGE-3551-05C1 | 1550nm | DFB | No Clipper | AC/AC | TTL | 80km | 0~70℃ |
| AXGE-3551-05C3 | 1550nm | DFB | No Clipper | AC/AC | TTL | 80km | -40~85℃ |
| AXGE-3551-11C1 | 1550nm | DFB | Bkwd Clipper | DC/DC | PECL | 80km | 0~70℃ |
| AXGE-3551-11C3 | 1550nm | DFB | Bkwd Clipper | DC/DC | PECL | 80km | -40~85℃ |
| AXGE-3551-15C1 | 1550nm | DFB | Bkwd Clipper | AC/AC | TTL | 80km | 0~70℃ |
| AXGE-3551-15C3 | 1550nm | DFB | Bkwd Clipper | AC/AC | TTL | 80km | -40~85℃ |

**NOTE:**

Distances are indicative only. Attenuation of 0.25 dB/km is used for the link length calculations. To calculate a more precise link budget based on specific conditions in your application, please refer to the Optical Specifications in Page#3.