AXGE-3351 1.25Gbps Single-mode 1310nm, 1x9 DSC Transceiver

Product Overview

The AXGE-3351 family of 1x9 DSC transceiver modules is specifically designed for the high performance integrated duplex data link over single-mode optical fiber. These transceiver modules are compliant with the DSC Multisource Agreement (MSA). These modules are designed to provide 1000Base-LHX compliant in Gigabit Ethernet applications.

The AXGE-3351 transceivers using a long wavelength (1310nm) DFB laser diode enable data transmission up to 40km on a single-mode (9/125μm) optical fiber.

Features

- **Low Profile (9.8mm maximum) plastic molded package**
- **1.25Gbps IEEE 802.3ah 1000BASE-LX10 compatible**
- **Single 3.3 power supply operation**
- **DC or AC coupling PECL level inputs and outputs**
- **PECL or TTL signal detect output**
- **Class 1 laser safety standard IEC 60825 compliant**
- **40km link on a single-mode fiber**
- **Low power dissipation**

Applications

- **1xFibre Channel**
- **Gigabit Ethernet**
- **High speed I/O for file server**

Block diagram

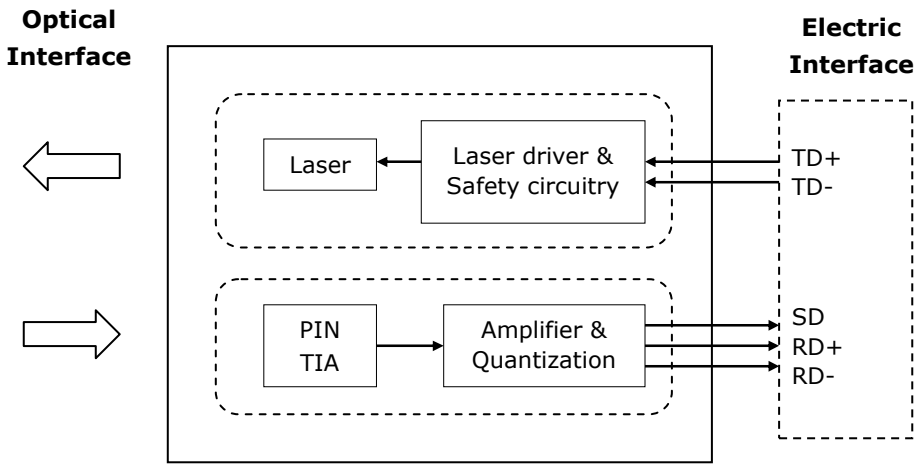

Absolute Maximum Ratings

Parameter	Symbol	Min.	Max.	Unit	Note
Storage Temperature	T_S	-40	+85	℃	
Supply Voltage	$V_{CC}T$ $V_{CC}R$	-0.5	4.0	V	
Storage Relative Humidity	RH	5	95	%	
Lead Soldering Temperature	T_{ls}		260	℃	
Lead Soldering Time	t_{ls}		10	sec	

Recommended Operating Conditions

Parameter	Symbol	Min.	Typ.	Max.	Unit	Note
Case Operating Temperature	T_C	0		70	℃	Refer to ordering information
		-40		85		
Supply Voltage	V_{CC}	3.1	3.3	3.5	V	
Supply Current	$I_{TX}+I_{RX}$		150	300	mA	

Transmitter Electro-Optical Interface

Parameter	Symbol	Min.	Typ.	Max.	Unit	Note
Data Input Voltage – Low	V_L-V_{CC}	-1.81		-1.475	V	
Data Input Voltage - High	V_H-V_{CC}	-1.165		-0.880	V	
Optical Output Power	P_O	-2		+3	dBm	1
Optical Extinction Ratio	E_R	9			dB	
Center Wavelength	λ_C	1270	1310	1355	nm	
Spectral Width (-20dB)	$\Delta\lambda$			1	nm	
Side Mode Suppression Ratio	SMSR	30			dB	
Optical Rise / Fall Time	t_r / t_f			260	ps	2
Relative Intensity Noise	RIN			-120	dB/Hz	
Total Contributed Jitter	TJ			227	ps	

Notes:

1. Coupling into a 9/125μm single-mode fiber.
2. 20% to 80% value

Receiver Electro-Optical Characteristics

Parameter	Symbol	Min.	Typ.	Max.	Unit	Note
Receiver Overload	P_{IN}MAX	-2			dBm	1
Receiver Sensitivity	P_{IN}MIN			-23	dBm	1
Operating Center Wavelength	λ_c	1260		1620	nm	
Receiver Signal Detect – High	P_{RX_SDA}			-23	dBm	
Receiver Signal Detect – Low	P_{RX_SDD}	-35			dBm	
Receiver Signal Detect - Hysteresis	P_{RX_SDH}	0.5			dB	

Notes:

1. With BER better than or equal to 1×10^{-12}, measured in the center of the eye opening with 2^7 –1 PRBS

Pin Description

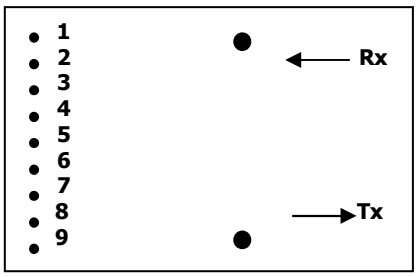

Top View

Pin No	Pin Name	Function	Notes
1	RxV_{EE}	Receiver signal ground	
2	RD+	Receiver data out	
3	RD-	Receiver data out bar	
4	SD	Signal detect	
5	RxV_{CC}	Receiver power supply	
6	TxV_{CC}	Transmitter power supply	
7	TD-	Transmitter data in bar	
8	TD+	Transmitter data in	
9	TxV_{EE}	Transmitter signal ground	

Recommended Interface Circuit

TX DC Coupling / RX DC Coupling, PECL Signal Detect

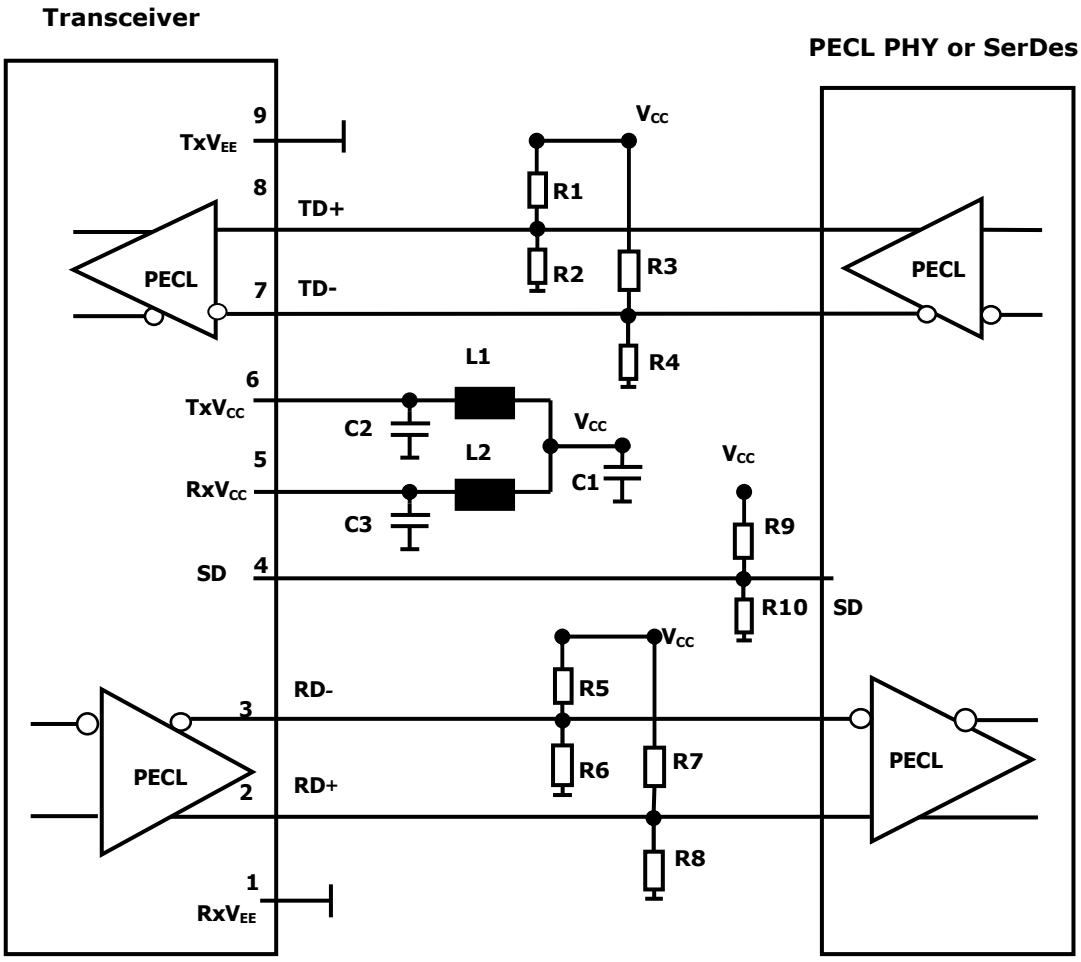

Notes:

R1/R3/R5/R7/R9=130 ohm @3.3V (Depends on SerDes chip used.)

=82 ohm @5V (Depends on SerDes chip used.)

R2/R4/R6/R8/R10=82 ohm @3.3V (Depends on SerDes chip used.)

=130 ohm @5V (Depends on SerDes chip used.)

C1=10uF

C2/C3=0.1uF

L1=L2=1uH

TX AC Coupling / RX AC Coupling, TTL Signal Detect

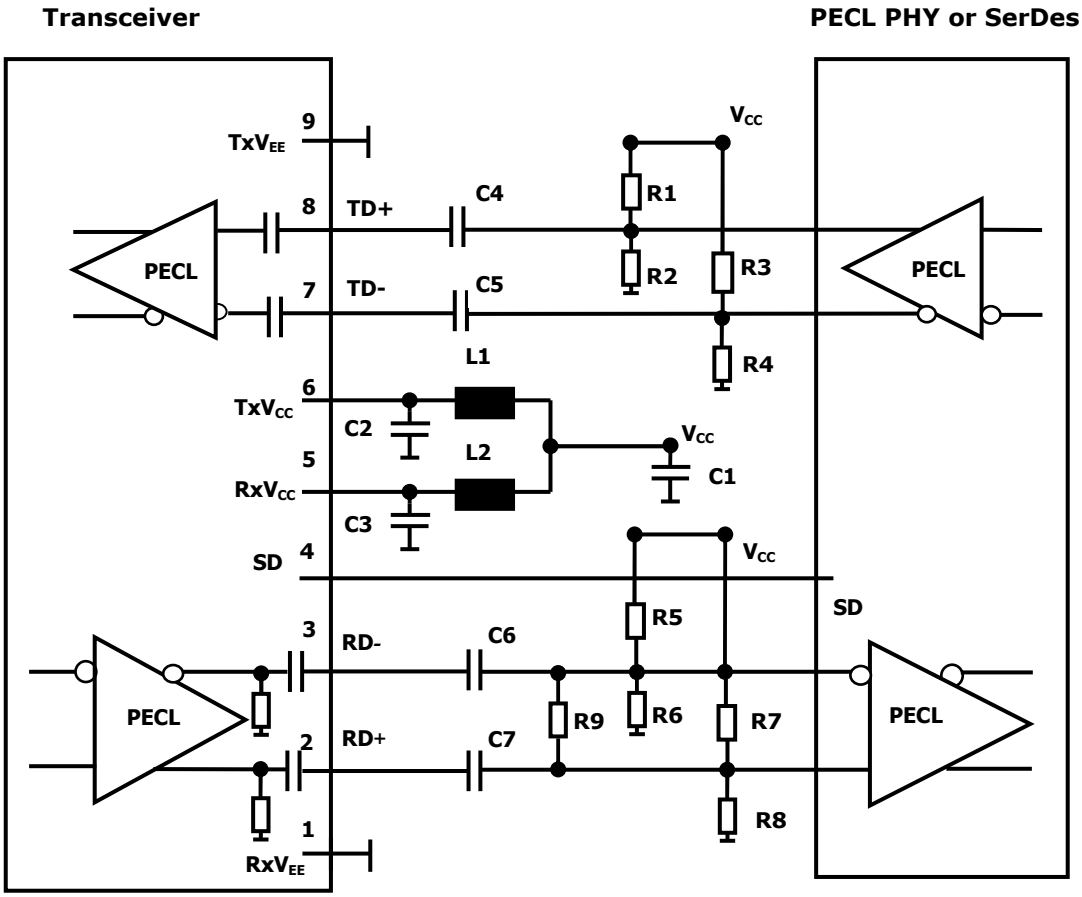

Notes:

R1/R3/R5/R7/R9=130 ohm @3.3V (Depends on SerDes chip used.)

=82 ohm @5V (Depends on SerDes chip used.)

R2/R4/R6/R8/R10=82 ohm @3.3V (Depends on SerDes chip used.

=130 ohm@5V (Depends on SerDes chip used.)

R9 =100 ohm (Depends on SerDes chip used.

C1=10uF

C2/C3/C4/C5/C6/C7=0.1uF

L1=L2=1uH

Mechanical Dimensions (Units in mm)

No Clipper

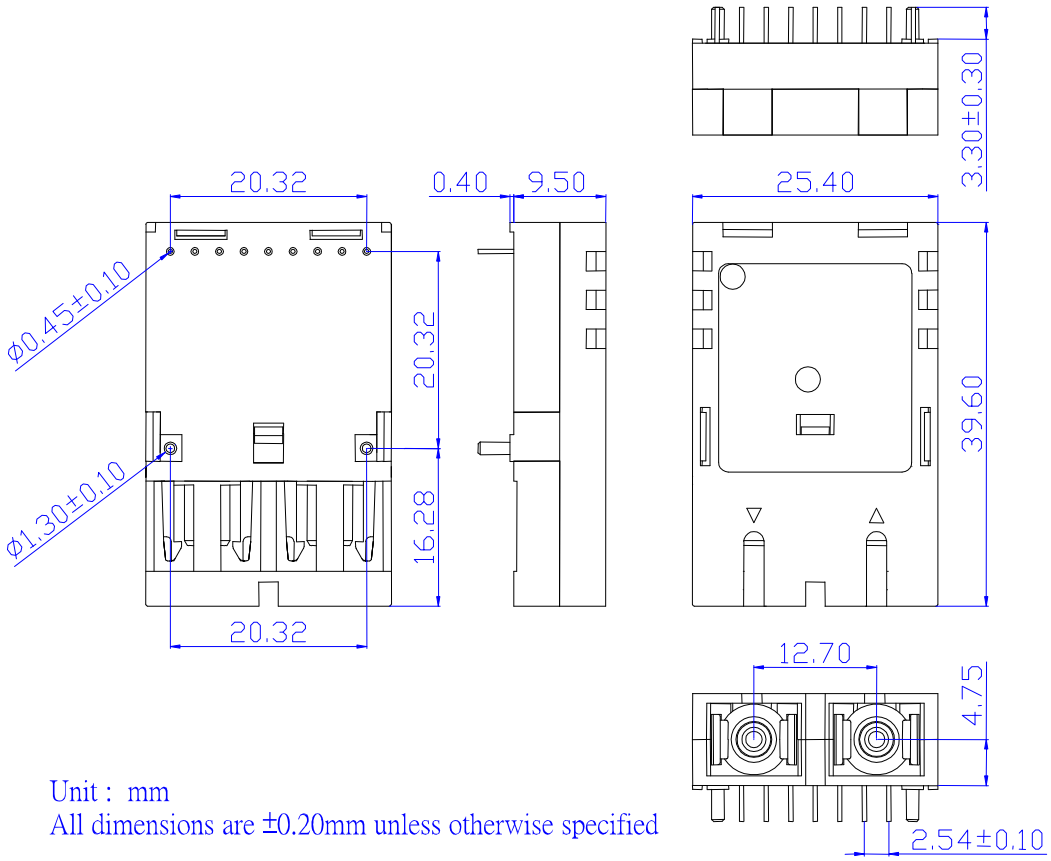

Mechanical Dimensions (Units in mm)

Backward Clipper

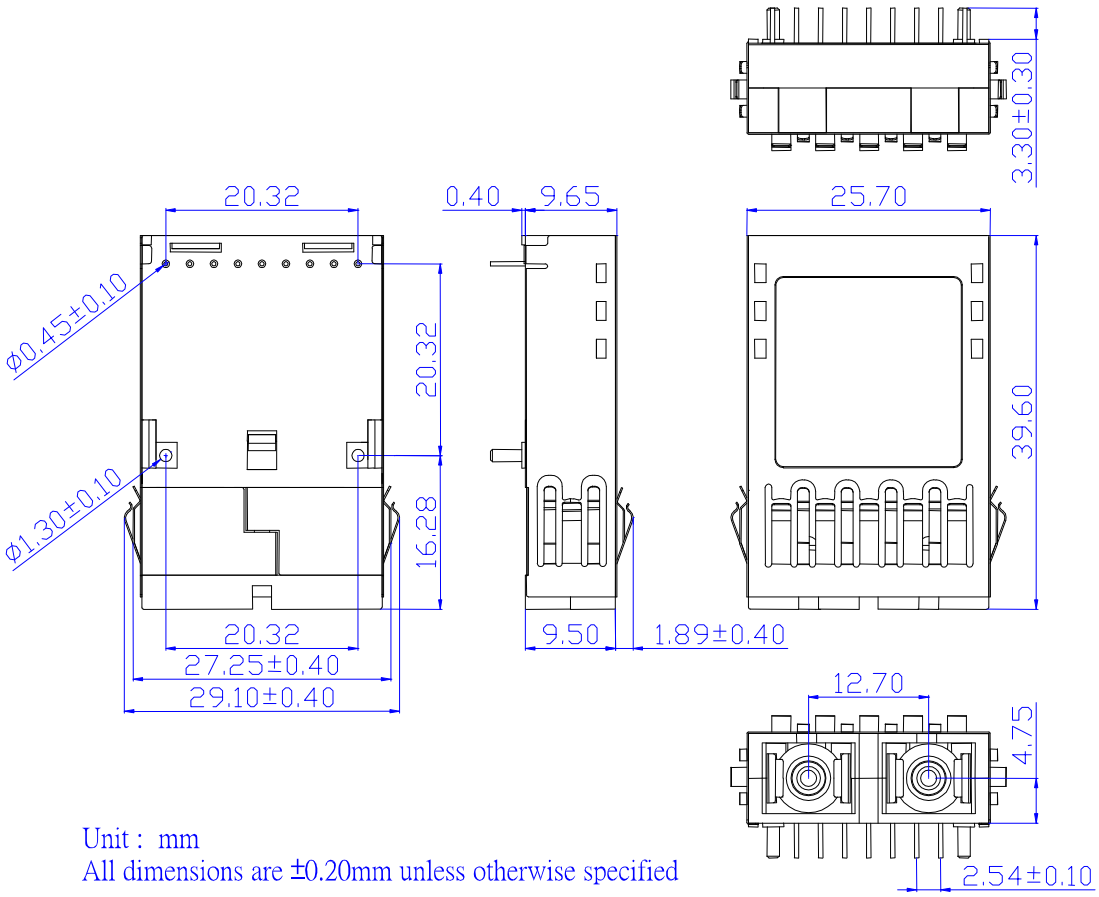

Ordering Information

AXGE–3351-xy9z

Operating temperature

1: 0~70℃

3: -40~85℃

I/O Interface

1: TX DC coupling / RX DC coupling, PECL Signal Detect

5: TX AC coupling / RX AC coupling, TTL Signal Detect

Case

0: No Clipper

1: Backward Clipper

Model No.	Wavelength	LD	Case	I/O	SD	Link	Temp.
AXGE-3351-0191	1310nm	DFB	No Clipper	DC/DC	PECL	40km	0~70℃
AXGE-3351-0193	1310nm	DFB	No Clipper	DC/DC	PECL	40km	-40~85℃
AXGE-3351-0591	1310nm	DFB	No Clipper	AC/AC	TTL	40km	0~70℃
AXGE-3351-0593	1310nm	DFB	No Clipper	AC/AC	TTL	40km	-40~85℃
AXGE-3351-1191	1310nm	DFB	Bkwd Clipper	DC/DC	PECL	40km	0~70℃
AXGE-3351-1193	1310nm	DFB	Bkwd Clipper	DC/DC	PECL	40km	-40~85℃
AXGE-3351-1591	1310nm	DFB	Bkwd Clipper	AC/AC	TTL	40km	0~70℃
AXGE-3351-1593	1310nm	DFB	Bkwd Clipper	AC/AC	TTL	40km	-40~85℃

NOTE:

Distances are indicative only. Attenuation of 0.40 dB/km is used for the link length calculations. To calculate a more precise link budget based on specific conditions in your application, please refer to the Optical Specifications in Page#3.