AXGE-5851 1.25Gbps Multimode 850nm, 1x9 DSC Transceiver

Product Overview

The AXGE-5851 family of 1x9 DSC transceiver modules is specifically designed for the high performance integrated duplex data link over multimode optical fiber. These transceiver modules are compliant with the DSC Multisource Agreement (MSA). These modules are designed to provide 1000Base-SX compliant in Gigabit Ethernet applications.

The AXGE-5851 transceivers using a short wavelength (850nm) VCSEL laser diode enable data transmission up to 550m on a multimode 50/125μm optical fiber and 300m on a multimode 62.5/125μm optical fiber.

Features

- **Low Profile (9.8mm maximum) plastic molded package**
- **1.0625Gbps Fibre Channel FC-PI 100-M5-SN-I compliant**
- **1.0625Gbps Fibre Channel FC-PI 100-M6-SN-I compliant**
- **1.25Gbps IEEE 802.3 1000BASE-SX compliant**
- **Single +3.3V power supply operation**
- **DC or AC coupling PECL level inputs and outputs**
- **PECL or TTL signal detect output**
- **Class 1 laser safety standard IEC 60825 compliant**
- **Low power dissipation**

Applications

- **1xFibre Channel**
- **Gigabit Ethernet**
- **High speed I/O for file server**

Block diagram

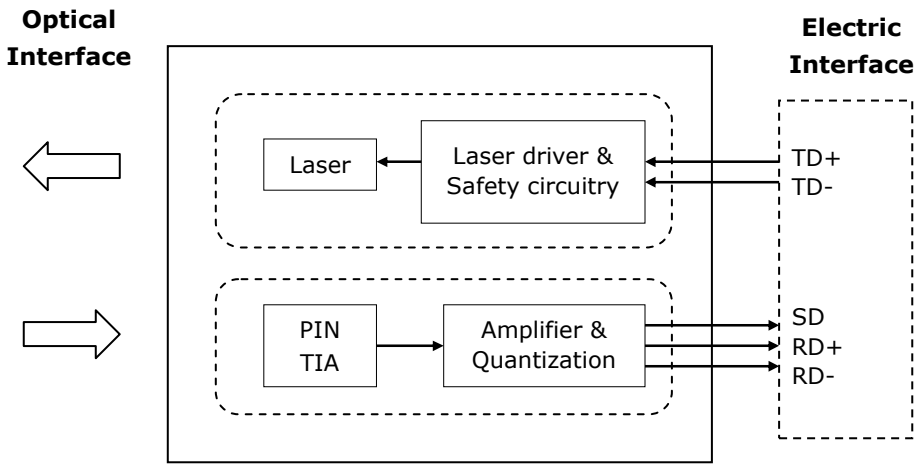

The transceiver is fundamentally consisted by two parts: transmitter and receiver. The transmitter features LVPECL differential data inputs (TD+ and TD-). The receiver features LVPECL differential data outputs (RD+ and RD-) and LVPECL for signal detect output (SD).

Absolute Maximum Ratings

Parameter	Symbol	Min.	Max.	Unit	Note
Storage Temperature	T_S	-40	+85	℃	
Supply Voltage	$V_{CC}T$ $V_{CC}R$	-0.5	4.0	V	
Storage Relative Humidity	RH	5	95	%	
Lead Soldering Temperature	T_{ls}		260	℃	
Lead Soldering Time	t_{ls}		10	sec	

Recommended Operating Conditions

Parameter	Symbol	Min.	Typ.	Max.	Unit	Note
Case Operating Temperature	T_{IC}	0		70	℃	Refer to ordering information
		-20		85		
		-40		85		
Supply Voltage	V_{CC}	3.1	3.3	3.5	V	
Supply Current	I_{TX} +I_{RX}		150	300	mA	

Transmitter Electro-Optical Interface

Parameter	Symbol	Min.	Typ.	Max.	Unit	Note
Data Input Voltage – Low	V_L-V_{CC}	-1.81		-1.475	V	
Data Input Voltage - High	V_H-V_{CC}	-1.165		-0.880	V	
Optical Output Power	P_O	-9.5		-4	dBm	1
Optical Extinction Ratio	E_R	9			dB	
Center Wavelength	λ_C	830	850	860	nm	
Spectral Width (RMS)	$\Delta\lambda$			0.85	nm	
Optical Rise / Fall Time	t_r / t_f			260	ps	2
Relative Intensity Noise	RIN			-117	dB/Hz	
Total Contributed Jitter	TJ			227	ps	

Notes:

1. Coupling into a 50/125μm multimode fiber.
2. 20% to 80% value

Receiver Electro-Optical Characteristics

Parameter	Symbol	Min.	Typ.	Max.	Unit	Note
Receiver Overload	P_{IN}MAX	-3			dBm	1
Receiver Sensitivity	P_{IN}MIN			-17	dBm	1
Operating Center Wavelength	λ_c	770		860	nm	
Receiver Signal Detect – High	P_{RX_SDA}			-17.5	dBm	
Receiver Signal Detect – Low	P_{RX_SDD}	-35			dBm	
Receiver Signal Detect - Hysteresis	P_{RX_SDH}	0.5			dB	

Notes:

1. With BER better than or equal to 1×10^{-12}, measured in the center of the eye opening with 2^7 –1 PRBS

Pin Description

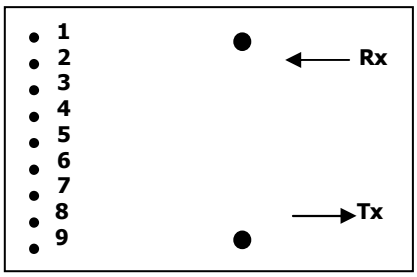

Top View

Pin No	Pin Name	Function	Notes
1	RxV_{EE}	Receiver signal ground	
2	RD+	Receiver data out	
3	RD-	Receiver data out bar	
4	SD	Signal detect	
5	RxV_{CC}	Receiver power supply	
6	TxV_{CC}	Transmitter power supply	
7	TD-	Transmitter data in bar	
8	TD+	Transmitter data in	
9	TxV_{EE}	Transmitter signal ground	

Recommended Interface Circuit

TX DC Coupling / RX DC Coupling, PECL Signal Detect

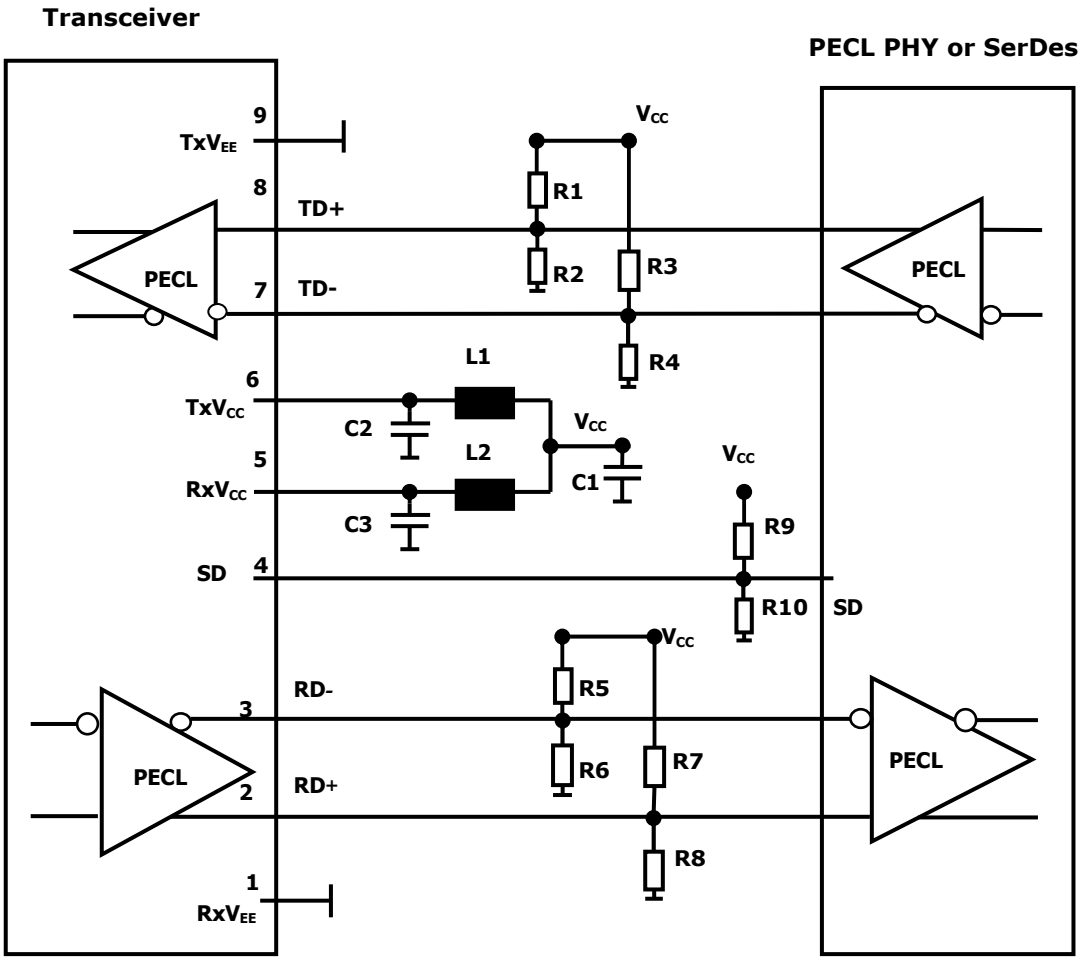

Notes:

R1/R3/R5/R7/R9=130 ohm @3.3V (Depends on SerDes chip used.)

=82 ohm @5V (Depends on SerDes chip used.)

R2/R4/R6/R8/R10=82 ohm @3.3V (Depends on SerDes chip used.)

=130 ohm @5V (Depends on SerDes chip used.)

C1=10uF

C2/C3=0.1uF

L1=L2=1uH

TX AC Coupling / RX AC Coupling, TTL Signal Detect

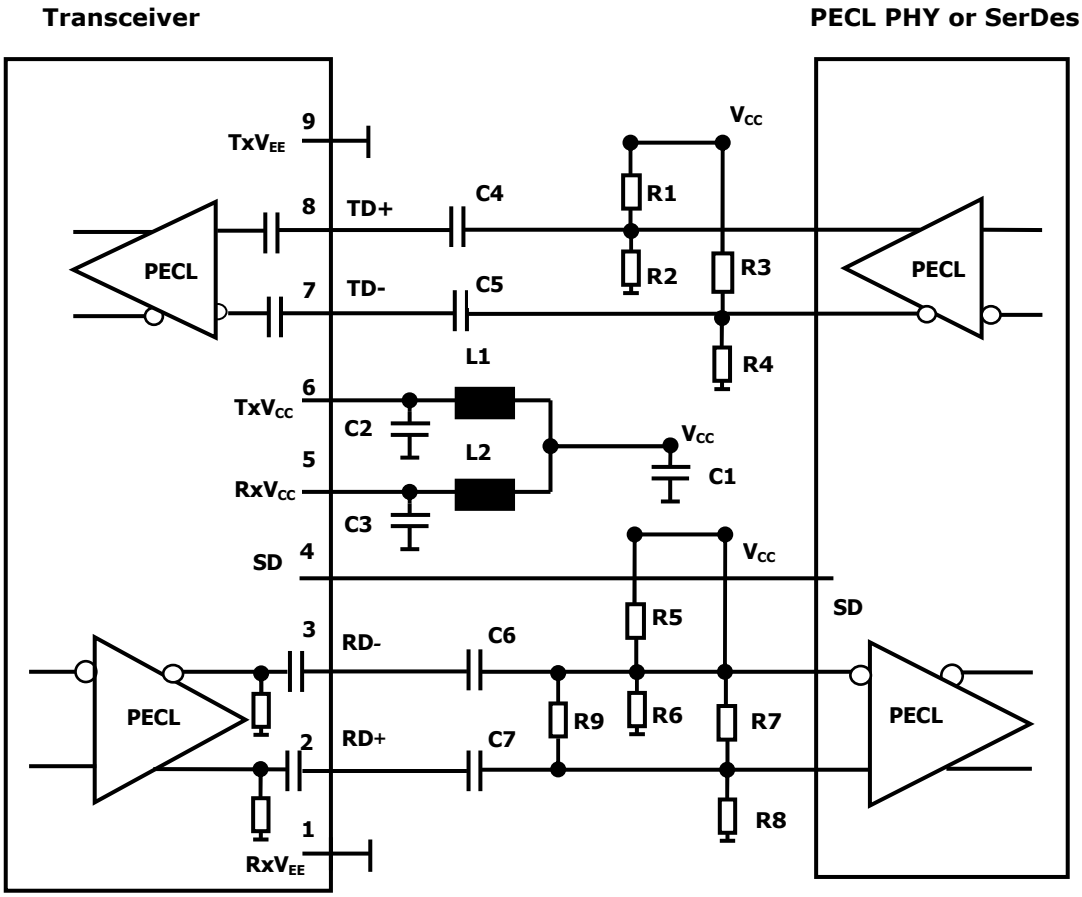

Notes:

R1/R3/R5/R7/R9=130 ohm @3.3V (Depends on SerDes chip used.)

=82 ohm @5V (Depends on SerDes chip used.)

R2/R4/R6/R8/R10=82 ohm @3.3V (Depends on SerDes chip used.

=130 ohm@5V (Depends on SerDes chip used.)

R9 =100 ohm (Depends on SerDes chip used.

C1=10uF

C2/C3/C4/C5/C6/C7=0.1uF

L1=L2=1uH

Mechanical Dimensions (Units in mm)

No Clipper

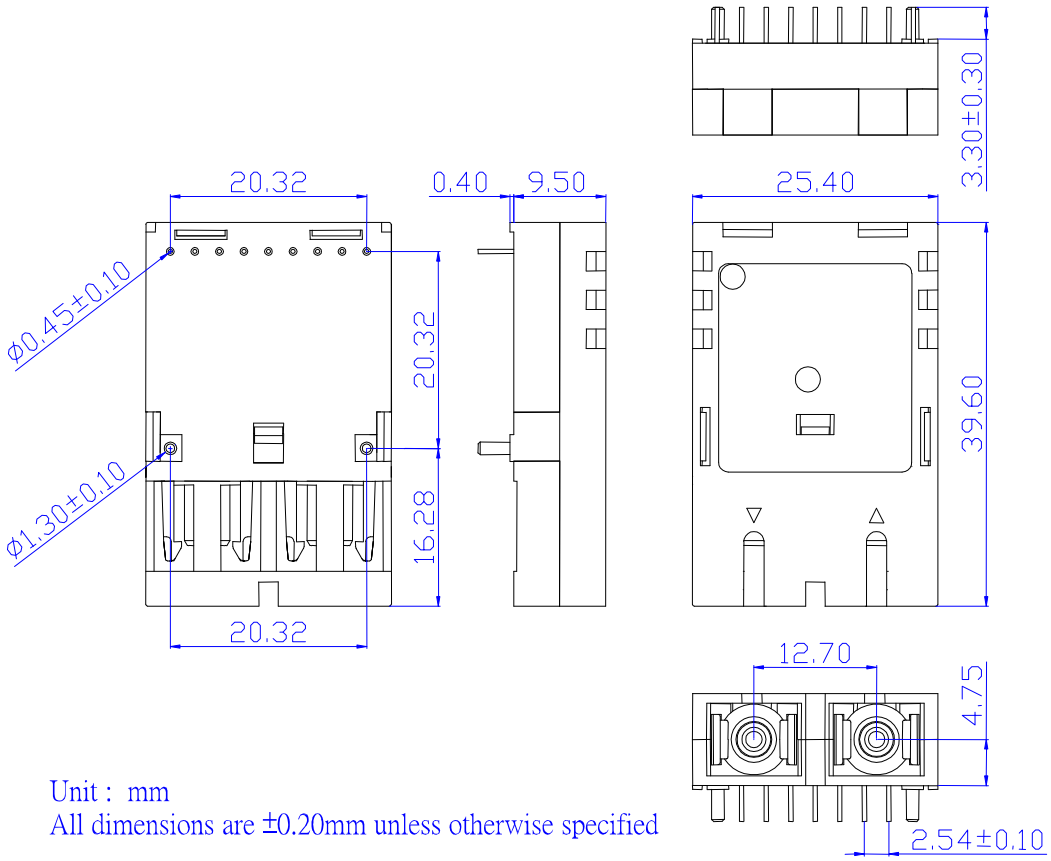

Mechanical Dimensions (Units in mm)

Backward Clipper

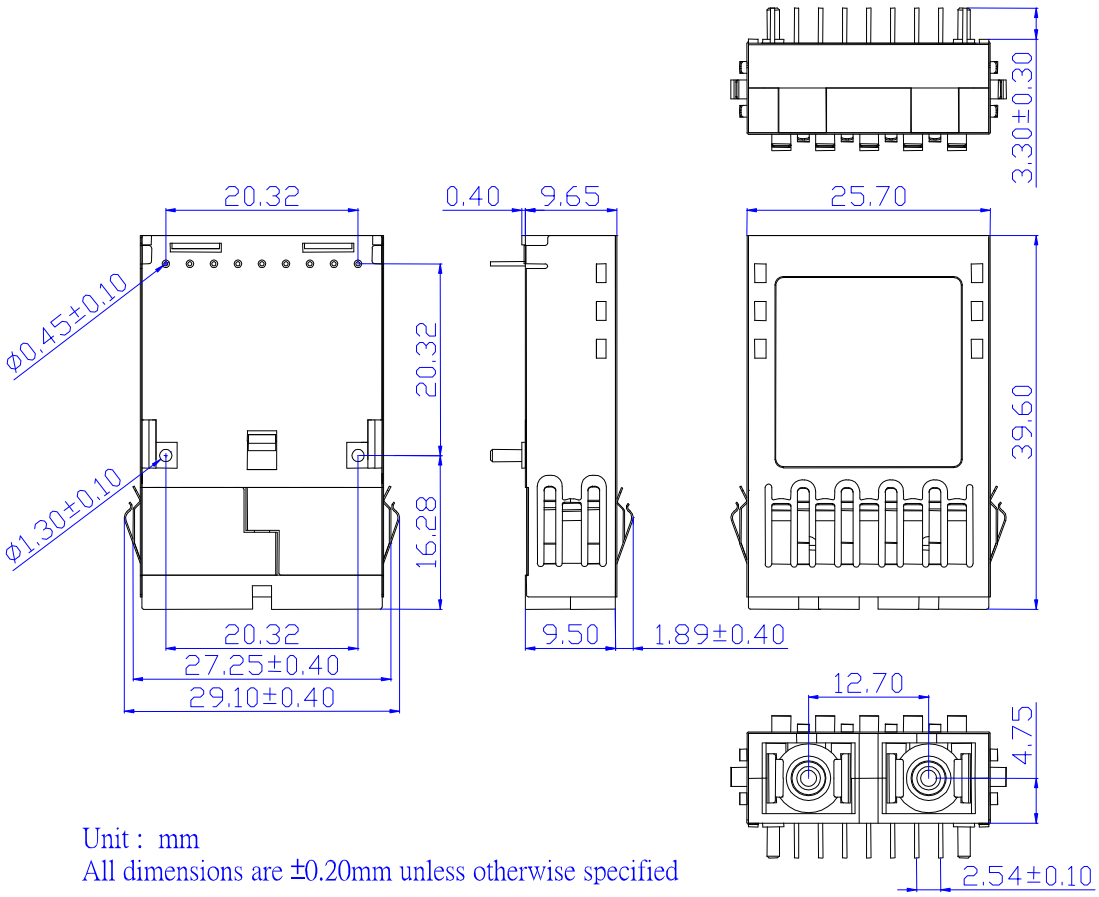

Ordering Information

AXGE–5851-xy1z

Operating temperature

1: 0~70℃

2: -20~85℃

3: -40~85℃

I/O Interface

1: TX DC coupling / RX DC coupling, PECL Signal Detect

5: TX AC coupling / RX AC coupling, TTL Signal Detect

Clipper

0: No Clipper

1: Backward Clipper

Model No.	Wavelength	LD	Case	I/O	SD	Link	Temp.
AXGE-5851-0111	850nm	VCSEL	No Clipper	DC/DC	PECL	550m	0~70℃
AXGE-5851-0112	850nm	VCSEL	No Clipper	DC/DC	PECL	550m	-20~85℃
AXGE-5851-0113	850nm	VCSEL	No Clipper	DC/DC	PECL	550m	-40~85℃
AXGE-5851-0511	850nm	VCSEL	No Clipper	AC/AC	TTL	550m	0~70℃
AXGE-5851-0512	850nm	VCSEL	No Clipper	AC/AC	TTL	550m	-20~85℃
AXGE-5851-0513	850nm	VCSEL	No Clipper	AC/AC	TTL	550m	-40~85℃
AXGE-5851-1111	850nm	VCSEL	Bkwd Clipper	DC/DC	PECL	550m	0~70℃
AXGE-5851-1112	850nm	VCSEL	Bkwd Clipper	DC/DC	PECL	550m	-20~85℃
AXGE-5851-1113	850nm	VCSEL	Bkwd Clipper	DC/DC	PECL	550m	-40~85℃
AXGE-5851-1511	850nm	VCSEL	Bkwd Clipper	AC/AC	TTL	550m	0~70℃
AXGE-5851-1512	850nm	VCSEL	Bkwd Clipper	AC/AC	TTL	550m	-20~85℃
AXGE-5851-1513	850nm	VCSEL	Bkwd Clipper	AC/AC	TTL	550m	-40~85℃