AXFE-1311 125Mbps Multimode 1310nm, 1X9 ST Transceiver

Product Overview

The AXFE-1311 family of 1x9 ST transceiver module is specifically designed for the high performance integrated duplex data link over multimode optical fiber. These transceiver modules are compliant with the ST Multisource Agreement (MSA). These modules are designed to provide 100Base-FX compliant in Fast Ethernet applications.

The AXFE-1311 transceivers using a long wavelength (1310nm) light source enable data transmission up to 5km on a multimode optical fiber.

Features

- **Duplex ST receptacle**
- **125Mbps IEEE802.3u 100BASE-FX compliant**
- **125Mbps FDDI ISO/IEC 9314-1 compliant**
- **Single +3.3~5V power supply operation**
- **DC coupled PECL level inputs and outputs**
- **PECL signal detect output**
- **Class 1 laser safety standard IEC 60825 compliant**
- **5km link on a multimode fiber**
- **Low power dissipation**

Applications

- **ATM switches and routers**
- **Fast Ethernet**
- **FDDI**

Block diagram

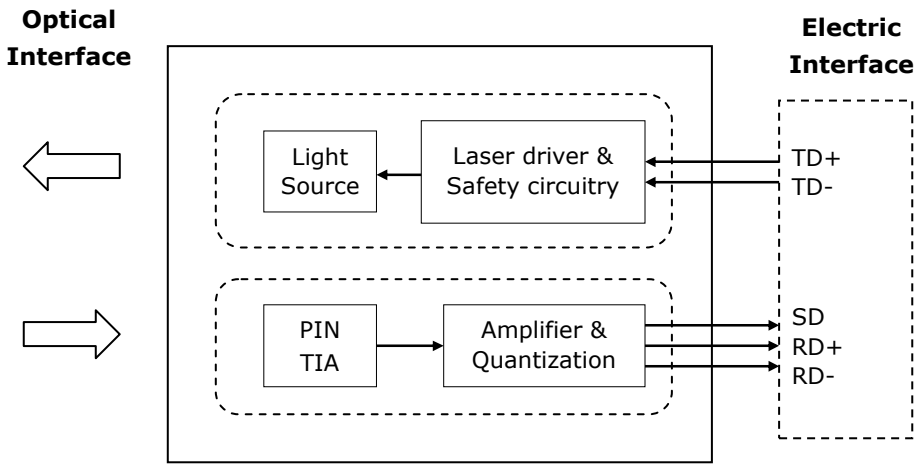

Absolute Maximum Ratings

Parameter	Symbol	Min.	Max.	Unit	Note
Storage Temperature	T_S	-40	+85	℃	
Supply Voltage	$V_{CC}T$ $V_{CC}R$	-0.5	6.0	V	
Storage Relative Humidity	RH	5	95	%	
Lead Soldering Temperature	T_{ls}		260	℃	
Lead Soldering Time	t_{ls}		10	sec	

Recommended Operating Conditions

Parameter	Symbol	Min.	Typ.	Max.	Unit	Note
Case Operating Temperature	T_C	0		70	℃	Refer to ordering information
		-40		85		
Supply Voltage	V_{CC}	3.1	3.3	3.5	V	
		4.75	5.0	5.25		
Supply Current	$I_{TX}+I_{RX}$		150	250	mA	

Transmitter Electro-Optical Interface

Parameter	Symbol	Min.	Typ.	Max.	Unit	Note
Data Input Voltage – Low	V_L-V_{CC}	-1.81		-1.475	V	
Data Input Voltage - High	V_H-V_{CC}	-1.165		-0.880	V	
Optical Output Power	P_O	-9		0	dBm	1
Optical Extinction Ratio	E_R	10			dB	
Center Wavelength	λ_C	1270		1380	nm	
Spectral Width (RMS)	$\Delta\lambda$			7.7	nm	
Optical Rise / Fall Time	t_r / t_f			3.0	ns	2
Duty Cycle Distortion	DCD			1.0	ns	
Random Jitter	RJ			0.76	ns	

Notes:

1. Coupling into a 62.5/125μm, NA=0.275 fiber
2. 10% to 90% value

Receiver Electro-Optical Characteristics

Parameter	Symbol	Min.	Typ.	Max.	Unit	Note
Receiver Overload	P_{IN}MAX	0			dBm	1
Receiver Sensitivity	P_{IN}MIN			-30	dBm	1
Operating Center Wavelength	λ_c	1270		1380	nm	
Receiver Signal Detect – High	P_{RX_SDA}			-32	dBm	
Receiver Signal Detect – Low	P_{RX_SDD}	-45			dBm	
Receiver Signal Detect - Hysteresis	P_{RX_SDH}	1.0			dB	
Receiver Signal Detect Voltage - Low	V_{SDL}-V_{CC}	-2		-1.58	V	
Receiver Signal Detect Voltage - High	V_{SDH}-V_{CC}	-1.1		-0.74	V	

Notes:

1. With BER better than or equal to 1×10^{-12}, measured in the center of the eye opening with 2^7 –1 PRBS

Pin Description

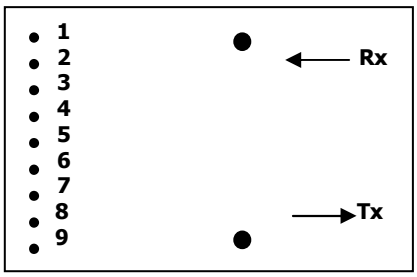

Top View

Pin No	Pin Name	Function	Notes
1	RxV_{EE}	Receiver signal ground	
2	RD+	Receiver data out	
3	RD-	Receiver data out bar	
4	SD	Signal detect	
5	RxV_{CC}	Receiver power supply	
6	TxV_{CC}	Transmitter power supply	
7	TD-	Transmitter data in bar	
8	TD+	Transmitter data in	
9	TxV_{EE}	Transmitter signal ground	

Recommended Interface Circuit

TX DC Coupling / RX DC Coupling, PECL Signal Detect

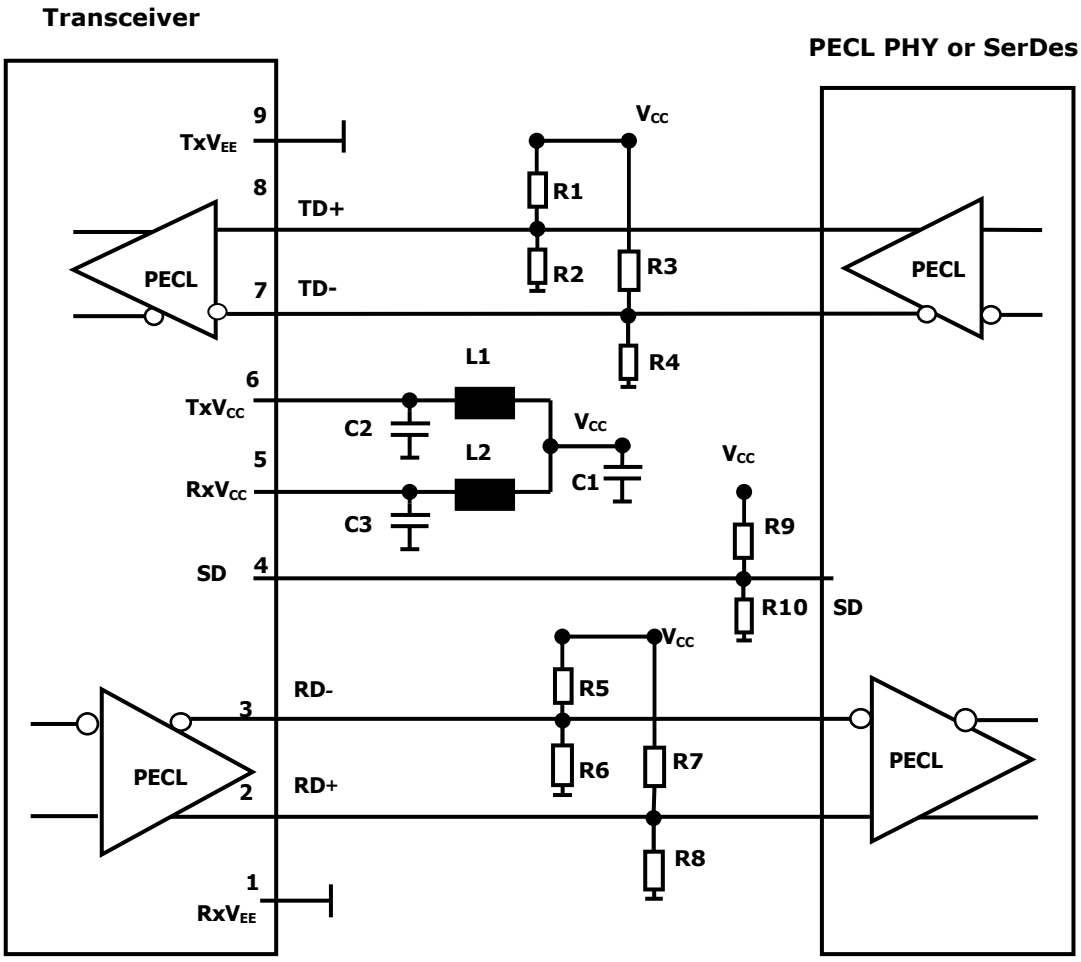

Notes:

R1/R3/R5/R7/R9=130 ohm @3.3V (Depends on SerDes chip used.)

=82 ohm @5V (Depends on SerDes chip used.)

R2/R4/R6/R8/R10=82 ohm @3.3V (Depends on SerDes chip used.)

=130 ohm @5V (Depends on SerDes chip used.)

C1=10uF

C2/C3=0.1uF

L1=L2=1uH

Mechanical Dimensions (Units in mm)

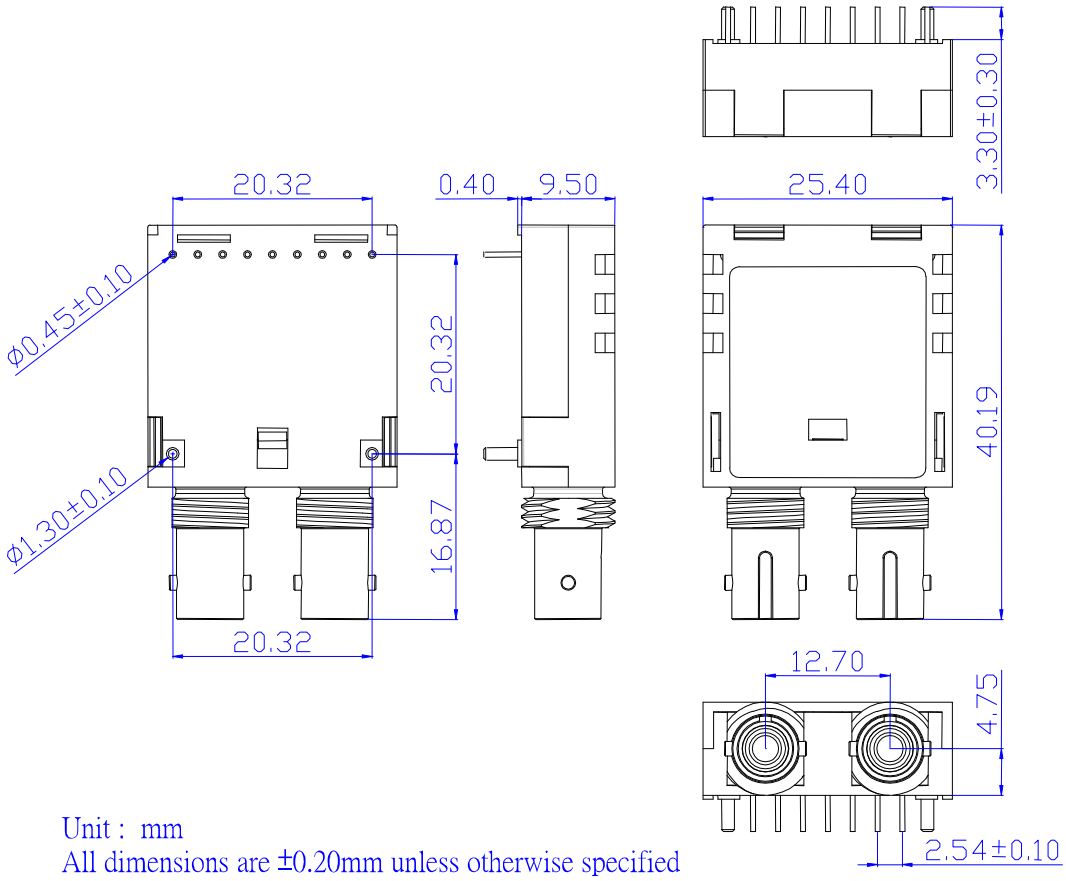

Ordering Information

AXFE–1311-0KN<u>x</u>

Operating Temperature

6: 0~ 70℃

7: -40~ 85℃

Model No.	Wavelength	LD	I/O	SD	Link	Temp.
AXFE-1311-0KN6	1310nm	FP	DC/DC	PECL	5km	0~70℃
AXFE-1311-0KN7	1310nm	FP	DC/DC	PECL	5km	-40~85℃