AXFE-3511 125Mbps Single-mode 1550nm, 1x9 DSC Transceiver

Product Overview

The AXFE-3511 family of 1x9 DSC transceiver module is specifically designed for the high performance integrated duplex data link over single-mode optical fiber. These transceiver modules are compliant with the DSC Multisource Agreement (MSA). These modules are designed to provide long reach link in Fast Ethernet applications.

The AXFE-3511 transceivers using a long wavelength (1550nm) DFB LD enable data transmission up to 120km on a single-mode optical fiber.

Features

- **Low Profile (9.8mm maximum) plastic molded package**
- **125Mbps IEEE802.3u Fast Ethernet compatible**
- **155Mbps ITU-T G.957 STM L-1.2 compatible**
- **155Mbps SONET OC-3 LR-2 compatible**
- **Single +3.3~5V power supply operation**
- **DC coupled PECL level inputs and outputs**
- **PECL signal detect output**
- **Class 1 laser safety standard IEC 60825 compliant**
- **100 / 120km reach**
- **Low power dissipation**

Applications

- **ATM switches and routers**
- **Fast Ethernet**
- **SONET/SDH switch infrastructure**

Block diagram

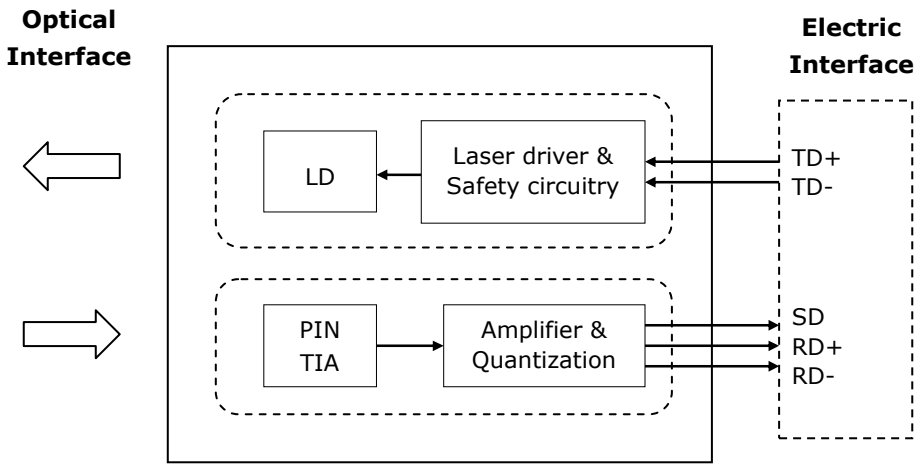

Absolute Maximum Ratings

Parameter	Symbol	Min.	Max.	Unit	Note
Storage Temperature	T_S	-40	+85	℃	
Supply Voltage	$V_{CC}T$ $V_{CC}R$	-0.5	6.0	V	
Storage Relative Humidity	RH	5	95	%	
Lead Soldering Temperature	T_{ls}		260	℃	
Lead Soldering Time	t_{ls}		10	sec	

Recommended Operating Conditions

Parameter	Symbol	Min.	Typ.	Max.	Unit	Note
Case Operating Temperature	T_C	0		70	℃	Refer to ordering information
		-40		85		
Supply Voltage	V_{CC}	3.1	3.3	3.5	V	
		4.75	5.0	5.25		
Supply Current	$I_{TX}+I_{RX}$		150	300	mA	

Transmitter Electro-Optical Interface

Parameter		Symbol	Min.	Typ.	Max.	Unit	Note
Data Input Voltage – Low		V_L-V_{CC}	-1.81		-1.475	V	
Data Input Voltage - High		V_H-V_{CC}	-1.165		-0.880	V	
Optical Output Power	100km	P_O	-5		0	dBm	
	120km		0		+5		
Optical Extinction Ratio		E_R	10			dB	
Center Wavelength		λ_C	1530	1550	1570	nm	
Spectral Width (-20dB)		$\Delta\lambda$			1	nm	
Side Mode Suppression Ratio		SMSR	30			dB	
Optical Rise / Fall Time		t_r / t_f			2.0	ns	1
Duty Cycle Distortion		DCD			1.0	ns	
Random Jitter		RJ			0.76	ns	

Notes:

1. 10% to 90% value

Receiver Electro-Optical Characteristics

Parameter		Symbol	Min.	Typ.	Max.	Unit	Note
Receiver Overload		P_{IN}MAX	0			dBm	1
Receiver Sensitivity	100km	P_{IN}MIN			-35	dBm	1
	120km				-35		
Operating Center Wavelength		λ_C	1260		1620	nm	
Receiver Signal Detect – High		P_{RX_SDA}			-35	dBm	
Receiver Signal Detect – Low		P_{RX_SDD}	-45			dBm	
Receiver Signal Detect - Hysteresis		P_{RX_SDH}	1.0			dB	
Receiver Signal Detect Voltage - Low		V_{SDL}-V_{CC}	-2		-1.58	V	
Receiver Signal Detect Voltage - High		V_{SDH}-V_{CC}	-1.1		-0.74	V	

Notes:

1. With BER better than or equal to 1×10^{-12}, measured in the center of the eye opening with 2^7 –1 PRBS

Pin Description

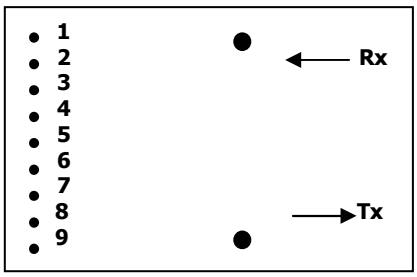

Top View

Pin No	Pin Name	Function	Notes
1	RxV_{EE}	Receiver signal ground	
2	RD+	Receiver data out	
3	RD-	Receiver data out bar	
4	SD	Signal detect	
5	RxV_{CC}	Receiver power supply	
6	TxV_{CC}	Transmitter power supply	
7	TD-	Transmitter data in bar	
8	TD+	Transmitter data in	
9	TxV_{EE}	Transmitter signal ground	

Recommended Interface Circuit

TX DC Coupling / RX DC Coupling, PECL Signal Detect

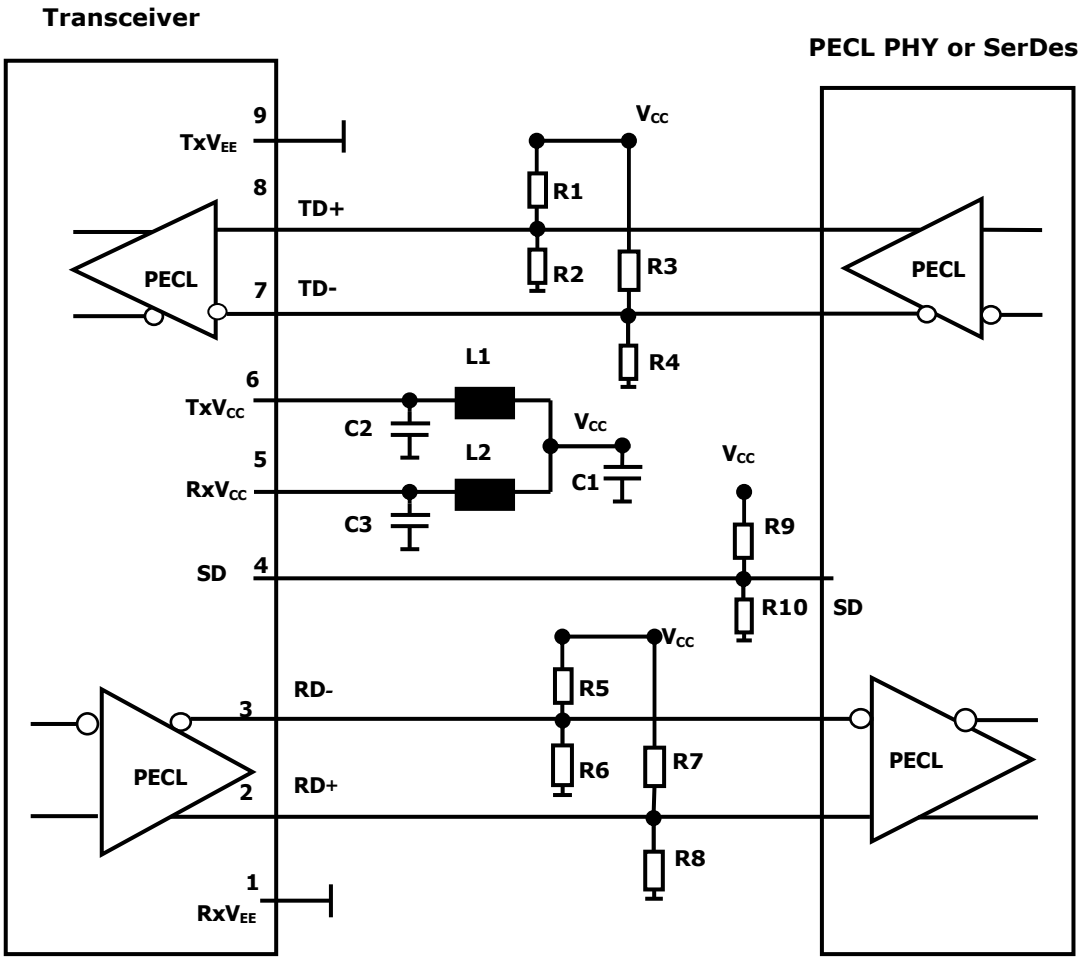

Notes:

R1/R3/R5/R7/R9=130 ohm @3.3V (Depends on SerDes chip used.)

=82 ohm @5V (Depends on SerDes chip used.)

R2/R4/R6/R8/R10=82 ohm @3.3V (Depends on SerDes chip used.)

=130 ohm @5V (Depends on SerDes chip used.)

C1=10uF

C2/C3=0.1uF

L1=L2=1uH

Mechanical Dimensions (Units in mm)

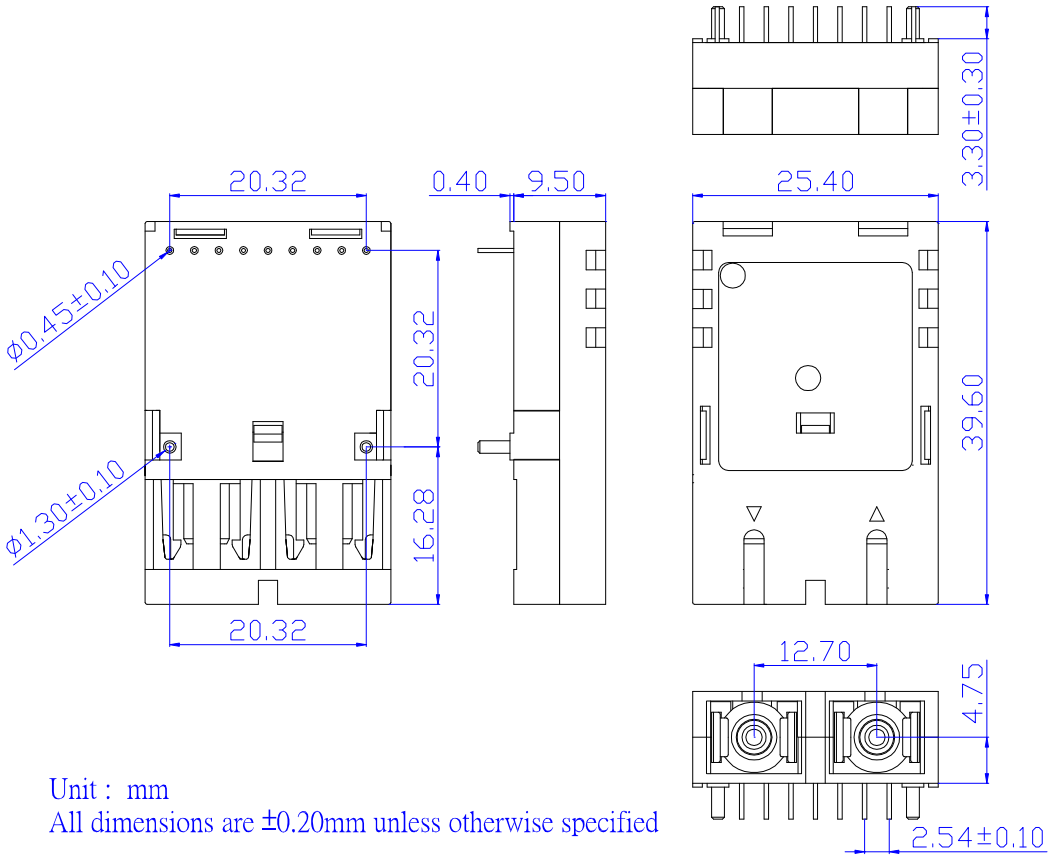

Unit : mm
All dimensions are ±0.20mm unless otherwise specified

Ordering Information

AXFE–3511-01xy

Operating Temperature

6: 0~ 70℃

7: -40~ 85℃

Transmission Distance

K: 100 km

E: 120 km

Product Code	Wavelength	LD	I/O	SD	Link	Temp.
AXFE-3511-01K6	1550nm	DFB	DC/DC	PECL	100km	0~70℃
AXFE-3511-01K7	1550nm	DFB	DC/DC	PECL	100km	-40~85℃
AXFE-3511-01E6	1550nm	DFB	DC/DC	PECL	120km	0~70℃
AXFE-3511-01E7	1550nm	DFB	DC/DC	PECL	120km	-40~85℃

NOTE:

Distances are indicative only. Attenuation of 0.25 dB/km is used for the link length calculations. To calculate a more precise link budget based on specific conditions in your application, please refer to the Optical Specifications in Page#3.